REED

TRUCK MOUNTED CONCRETE BOOM PUMPS
• ONE • TWO • THREE WARRANTY

REED warrants each of its new Truck Mounted Concrete Boom Pumps to be free of defects in material and workmanship under normal use and service for a period of One • Two • Three years from date of delivery based on the following conditions:

- One (1) year or 2400 pumping hours whichever comes first
- Two (2) years covering the Solid State Black Box
- Three (3) years covering all structural parts

The **WARRANTY** is issued **ONLY** to the **INITIAL USER.** The warranty periods begins when the product is delivered to the initial user or when first put into service, whichever occurs first. Said warranty is void if the machine is subject to misuse, neglect, accident or abuse.

The **STRUCTURAL WARRANTY** will not be honored unless, regular inspections have taken place and repairs as recommended as a result of the inspection. Inspection guidelines are detailed in the **ACPA BOOM INSPECTION BOOK**, attached in the extreme rear of the **PARTS MANUAL**. The frequency of inspection must adhere to the **ACPA BOOM INSPECTION BOOK**. For **WARRANTY** to be considered valid, these inspections must be performed by a "qualified person" as defined by the **ACPA SAFETY MANUAL**.

REED'S obligation under this warranty is limited to correcting without charge, at its factory, any parts or parts thereof which shall be returned to its factory, transportation prepaid and upon ***REED'S*** examination proves to have been originally defective. Correction of such defects by repair or replacement shall constitute fulfillment of all obligations to the initial user. This warranty does not include labor or transportation charges unless specifically identified and authorized in writing by ***REED.*** Nor does the warranty apply to any unit upon which repairs or unauthorized alterations have been made.

This warranty does not apply to normal maintenance service or to normal replacement of certain machine parts,which are subject to normal wear (such as concrete cylinders and wear components, valve mechanisms, delivery systems and bracketry, chassis decking / walkways, steps and hand rails, hopper grate, etc.) ***REED*** makes no warranty in respect to trade accessories or outside vendor components including truck chassis, such being subject to the warranties of their respective manufacturers.

THIS IS A LIMITED WARRANTY AND IS IN LIEU OF ANY OTHER WARRANTIES, EXPRESSED OR IMPLIED, INCLUDING ANY WARRANTY OF MERCHANTABILITY OR FITNESS FOR A PARTICULAR PURPOSE. In no event shall ***REED*** be liable for incidental, general or consequential damages, loss or any expense directly or indirectly related and resulting from use or lack of use caused by delay in delivery, parts failure, or any other causes associated with the product use. No person, firm or corporation is authorized to assume for ***REED*** any other liability in connection with the sale of ***REED*** products.

Content

1 DESCRIPTION 3

1.1 DESCRIPTION OF MAIN COMPONENTS 3
1.2 DESCRIPTION OF PUMPING CYCLE 5

2 SAFETY REGULATIONS 6

2.1 INTENDED USE 6
2.2 QUALIFICATION AND DUTIES OF THE ENGINE DRIVER 7
2.3 IMPORTANT SAFETY REGULATIONS 7
2.3.1 General 7
2.3.2 Maintenance and repair work 10
2.3.3 For the working area 11
2.3.4 Mounting 12
2.3.5 Minimum wall thickness and working pressure of conveying pipes 14

3 OPERATION OF THE CONCRETE PUMP 15

3.1 GENERAL 15
3.1.2 Changing of the distributor's control gear 15
3.1.3 Emergency stop: 15
3.1.4 Selector switch for operating mode: 15
3.1.5 Motor start / stop, speed + / -: 16
3.1.6.1 Pumping / Suction via desk: 16
3.1.6.2 Pumping / Suction via remote control: 16
3.1.6.3 Emergency mode Pumping / Suction 16
3.1.6.4. Leakcompensation 16
3.1.7. Agitator, water pump: 17
3.1.7.1 Agitator: 17
3.1.7.2. Agitator jogging skip 17
3.1.7.2. Water pump: 17
3.1.8. Vibrator: 17
3.1.9. Horn/Reset: 17
3.1.10. Light: 17
3.1.11. Stability automatic: 17
3.1.12. Display: 18
3.1.13 Pressure gauge: 18
3.2 MOUNTING OF THE PLACING BOOM 18
3.2.1. Support Operation 18
3.2.2 Mounting of support 19
3.2.3 Placing boom Operation 19
3.2.3 Mounting of placing boom: 19
3.3 PUMPING MODE 20
3.3.1 First pumping 20
3.3.2 Pumphing instruction (depend of medium) 20
3.3.3 Pumping instructions (depends of machine) 21

Content

3.4 CLEANING 22
3.4.1 Cleaning by sucking 22
3.4.2 Cleaning with under pressure water 23
3.5 EXCHANGE OF WEARING PARTS 24
3.5.1 Exchange of wearing plate and ring 24
3.5.2 Exchange of conveying pistons 24
3.5.4 Exchange of conveying cylinder / rotating 26
3.5.5 Exchange mixers' components 26
3.5.6. Exchange of mixers' blocks 26
3.5.7 Exchange of wearing mixers' capsules 27

4 MAINTENANCE 28

4.1 GENERAL INSTRUCTIONS 28
4.2 DAILY MAINTENANCE 28
4.3 AFTER FIRST 50 WORK HOURS 28
4.4 WEEKLY MAINTENANCE 28
4.5 EVERY 500 WORK/HOURS 29
. 4.6 EVERY 1000 WORK HOURS, OR PER YEAR 29
4.7 FILTER EXCHANGE 29
4.8 TURNED MECHANISM 30
4.9 DIVIDING SECTION 30
4.10 CHECKING OF WIDE SPLIT BETWEEN COG AND COGGED WREATH 31
4.11 WEARNESS MEASURING OF ROTATING BALL CONECTION 31
4.12 CHECKING SENSOR FUNCTIONS: 31
4.13 BOLTS TIGHTEN TORQUE 32
4.14 LUBRICATE LIST 33

5.0 SEARCHING MISTAKES: 34

1 Description

1.1 Description of main components

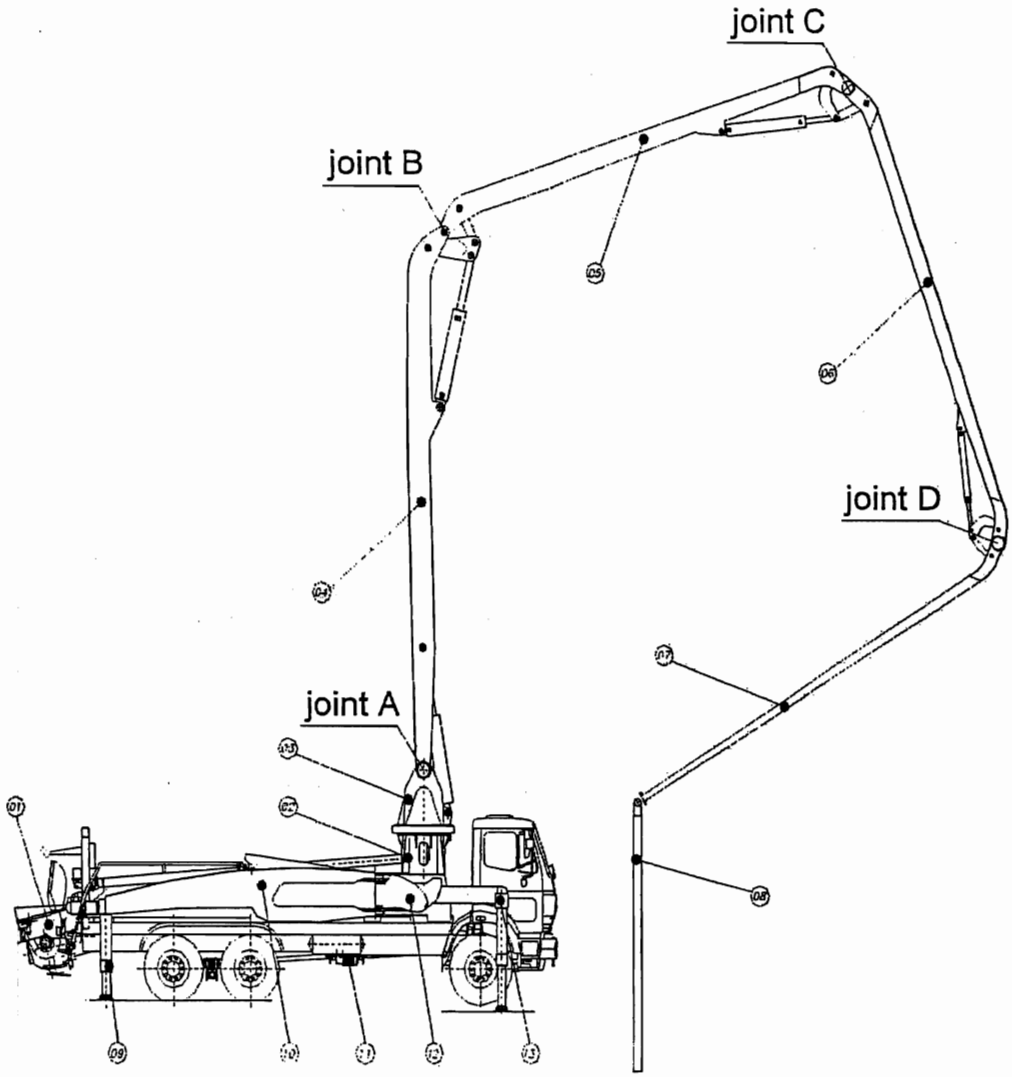

1	Pump unit	8	Final tube
2	Boom base	9	Support cylinder
3	Rotating head	10	Back support
4	Distributor boom section 1	11	Distribution gear box
5	Distributor boom section 2	12	Front support
6	Distributor boom section 3	13	Telescope
7	Distributor boom section 4		

Description

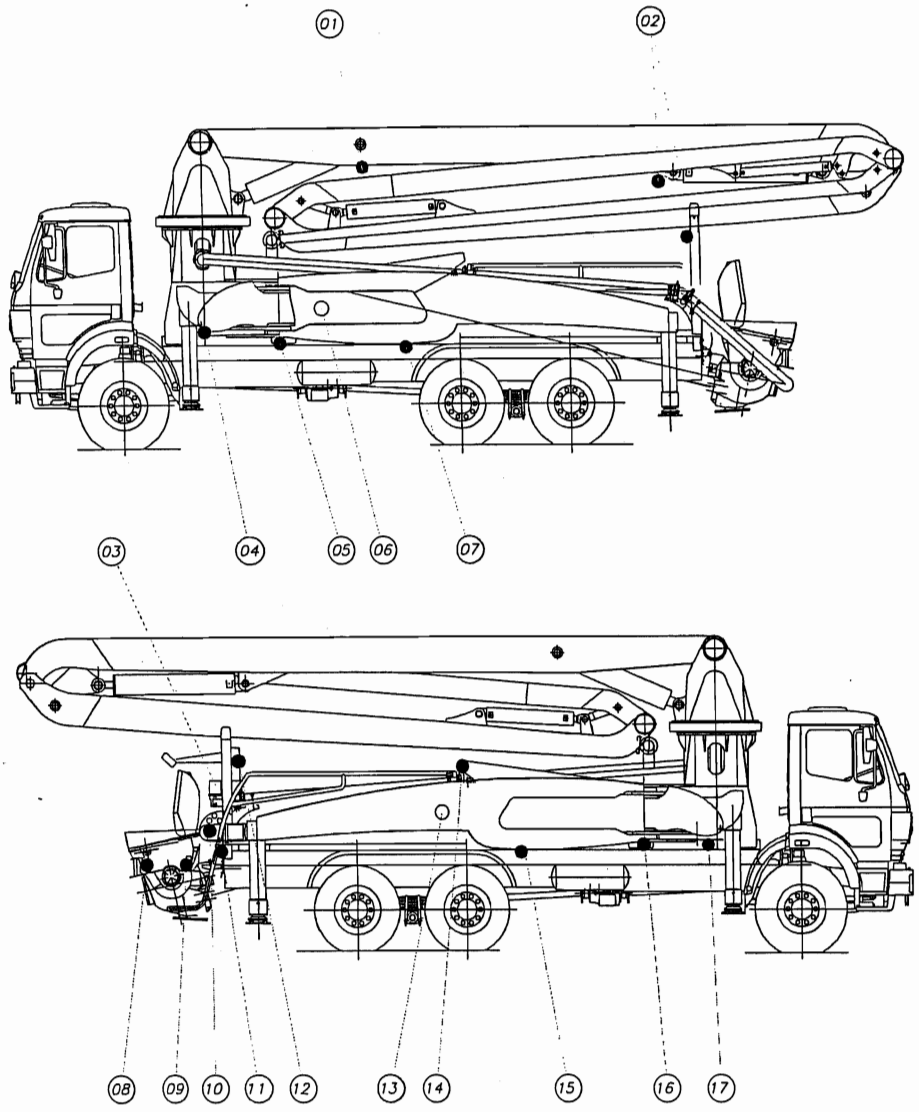

1 Catching hook
2 Warning lights
3 Lubrication plant
4 Tuning the final telescope position
5 Commanding block support left
6 Water pump, exhaust valve
7 Tuning in the transport position
8 Sirene switcher
9 Vibrator managing field
10 Control panel
11 Water pump managing field
12 Control device
13 Commanding block for concrete pump
14 Commanding block for boom
15 Tuning position for transport
16 Commanding block for support right
17 Tuning the final position of telescope

1.2 Description of pumping cycle

1. Waitzinger-concrete pump is generally generating by hydraulic. Hydraulic is working by engine vehicle with distribution gear box. Electrical control follows automaticly. All functions at control hydraulic block can be easily used, which in a case of falling out the sensor enables working with concrete pump. Motions number are possible to control from minimum to maximum. Drive cylinder (1) has automatic passage balancing. S-tube has automaticly balance tearing at wearing plate and wearing ring.

1:	Drive cylinder right	6:	S-tube	11:	Storage space
2:	Control block	7:	Wear plate		
3:	Water box	8:	Tilting drive		
4:	Conveyor piston	9:	Conveyor cylinder		
5:	S-valve system with vibrator	10:	Drive cylinder left		

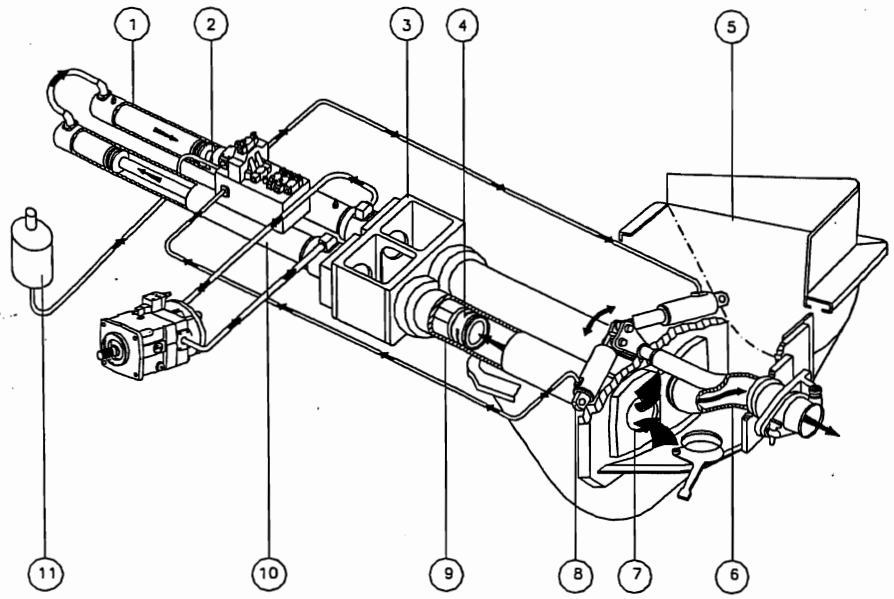

Concrete pump works as follows: Drive cylinder (1 and 10) is mutually hydraulicly connected and works in opposite way. With hydraulic pressure at the drive cylinder (10) drive cylinder (1) is carring out and across the piston (4) concrete from conveyer cylinder (9) is pushing back through S-tube (8) into the conveyer pump line. At the same time concrete from the mixer (5) is sucking out through the wearing plate (7) into the pushing back cylinder. At the end of pace, through the switcher at drive cylinder (1) storage space pressure (11) is pointed to the other side of turning cylinder (8) through control block (2) and hydraulic pump changes direction.

At sucking in section, with out S-tube moving only hydraulic pump changes it way.

2 Safety regulations

2.1 Intended use

The concrete pump is a machine to convey concrete. It is not intended for transport purposes (except for accessories). Please observe that the admissible total weights are not exceeded!

The use of a concrete pump can be dangerous!!

1. The relevant operating manual must be located in the machine.
2. The attendant has to be trained and must confirm that he has taken note of it by signing it.
3. The operator is obliged to act in accordance with the operating manual.
4. Improper handling may cause injuries as further described in the following paragraphs:
5. Eye injuries caused by concrete splashes, concrete water (water glass) or other chemical substances.
6. Eye or other injuries caused by splashing hydraulic oil, if the system is not pressure-free.
7. Injury caused by the force/impact of bursting couplings, bursting tubes or splashing gags in the concrete pipe.
8. Danger when touching electric cables.
9. Electric shock (possibly electrocution) regarding machines with electric drive, if the electric connection was realized improperly or defect feeding cables are used.
10. Danger of tipping over due to slumping/sinking of supports.
11. Injuries caused by burning when hot parts are touched.
12. Injuries caused by falling pipes.
13. Injuries to workers caused by unintended use of machine control and thus unintended operational functions of the machine.
14. Head and shoulder injuries caused by concrete falling down from the endhose or the concrete pipe.
15. Injuries caused by falling parts of concrete conveying pipes when they are laid improperly.
16. Injuries to the tube operator caused by the endhose when it got caught in the reinforcement and suddenly shoots out upon displacing.
17. Rolling away of the pump due to the break releasing or instable supporting legs.
18. Injuries caused during the opening of conveying pipes that are under pressure (after gags).
19. Injuries caused to a person reaching or falling inside the agitator.
20. Injuries caused by slipping on the oily and smeary machine.
21. Injuries caused to a person reaching into the water tank during simultaneous operation of the piston (pumping mode).
22. Cutting off one's hand when, for cleaning purposes, a person reaches into the S-pipe with his arm while the fold over arc is open.
23. Injuries caused by tripping over cables, tubes or reinforcement material.
24. Injuries caused by jamming with the travelling mixer or parts of it (chute).
25. Injuries caused by unsecured conveying pipes sliding or falling down.
26. Danger of jamming at the supporting legs.

2.2 Qualification and duties of the engine driver

Only the following people (attendant, engine driver) may be in charge of operating or maintaining concrete pumps and/or placing boom independently:

1. People who have completed their 18th year.
2. People who are physically and mentally fit and are not under the influence of drugs, alcohol or medicine.
3. People who have been trained for the operation and maintenance of the pump or the supplementary units and who have shown proof of their qualification to the employer and who are to be expected to fulfill their duties reliably.

All the equipment being used for safety reasons and accident prevention may not be changed or removed and are to be operated properly.

The operational safety is to be checked before each start-up. If any kind of defects – even in the faintest way – are detected, they have to be eliminated immediately. If necessary, the supervisor has to be informed, or in case of defects endangering the operational safety operation must be completely stopped.

The legislative body will accuse the engine driver or – if he cannot be hold reliable due to a lack of training or basic knowledge – his supervising personnel of accidents caused due to inobservance of regulations regarding safety and accident prevention by the responsible employer's liability insurance association or the legislative body of your country or due to a lack of circumspection. So please be careful.

2.3 Important safety regulations

2.3.1 General

1. The valid guidelines for concrete pumps and placing booms ZH 1/573 by the employer's liability insurance association or by the legislative body of your country as well as the operating and maintenance instructions by the producer are binding for the operation.
2. Concrete pumps and placing booms may only be operated in accordance with the intended use and in compliance with the operating manual by the producer. The company Waitzinger B.V.u.S.GmbH does not accept responsibility for any damage caused by improper operation, like e.g. not fully supported machines. The operating manual must be kept at the respective place of use so that it can be looked at.
3. All devices regarding safety and accident prevention, like e.g. danger and information signs, hopper grids, protective covering, etc. must be available. They may not be removed or changed.

DANGER OF ACCIDENT!

During the use of the machine, neither any protective device (e.g. water box cover) may be removed nor any kind of safety equipment (e.g. limit switch or mechanic safety device for disconnection of the grill) may be stopped. Never work without closed, firmly screwed and/or secured agitator grill.

4. The adjustments at the pressure control valves may not be changed. For concrete pumps and distributor booms, please refer to table.
5. The concrete pumps including their conveying pipes as well as any additional equipment are to be checked by an expert in accordance with the operating and working conditions as required, however at least once a year. The results of this test have to be written down in the test book delivered with the machine. If requested, they have to be shown.This test is required by law. If the expert does not detect any safety faults, a test badge will be placed next to the nameplate.

Attention: In case of malfunctioning, stop machine immediately and start it again only after the fault has been eliminated.!

6. Check the state of wear of the conveying pipe daily by tapping or rather by using a wall thickness measuring device and exchange worn parts.

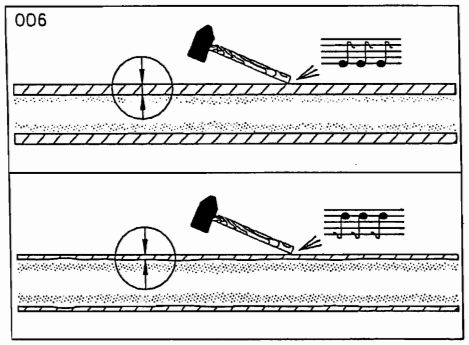

As far as the minimum wall thickness is concerned, please refer to the section „Minimum wall thickness and working pressure of conveying pipes". Always secure endhose by means of a safety stop.

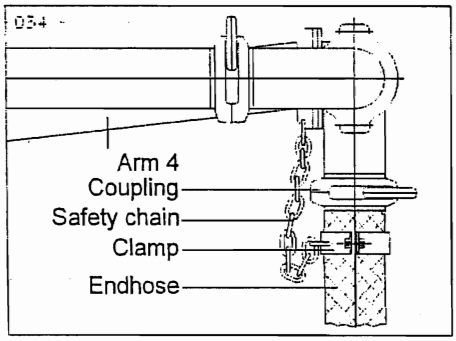

ATTENTION:

If worn and/or defect parts (high-pressure tubes, etc.) are not exchanged immediately, the producer does not assume product liability. The conveying pipes have been laid in driving posi-tion of the extended distributor without stresses and can only be exchanged like that without any problems. If conveying pipes are exchang-ed at position of the extended distributor, stresses might occur during assembly.

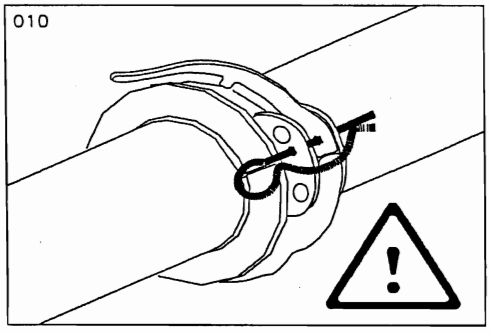

All conveying pipe couplings must be secured against unintended opening by means of spring retentions.

DANGER OF ACCIDENT !

Only tap and open the conveying pipe in an unpressurized state. Always pump 1 – 2 piston strokes backwards.

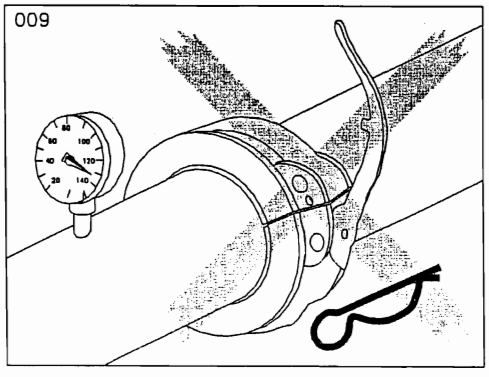

When the concrete pressure exceeds 85 bar, pumping may only be realized sidewards (not via the concrete placing boom). In this case,

the engine driver has to take the following safety precautions and make the following tests in addition:

a) Exclusively use the piping of the concrete pump producer. If concrete pressures range between 85 and 130 bar, high-pressure piping is necessary.
b) Test water pressure for pipes and couplings after 2,000 m³ at the latest. Test pressure 30% more than maximally working pressure.
c) Regular exchange (e.g. every 1,000 m³, if necessary, earlier) of the couplings, sealings and pipe bends that the operating personnel has to approach within a range of more than 3 m.

Attention:

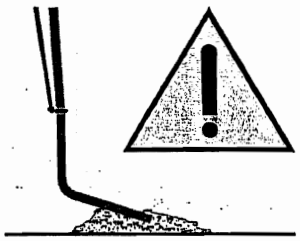

Never bend the endhose during the pumping mode. Gags increase the danger of accidents.

Never use the distributor boom to pull out the endhose if it got caught. You would endanger the stability or overload the steel structure.

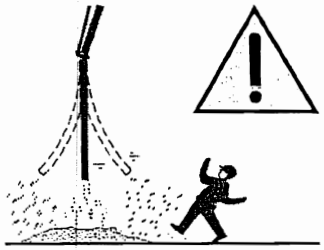

15. When the pump is started, even after gags, the endhose must be freely hanging. Keep clear the area around the endhose. (D 0 2 x L)

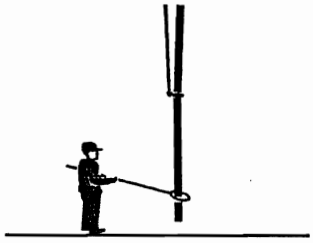

Attention:

Do not hold the eindhose manually, if necessary, use. guide rod.

Never reach with your hand inside the hopper, discharge unit, prepress equipment, water box, or the pipe switch or any other movable mechanical part, no matter whether the machine is switched on or off. Always stop the motor first and release the pressure from the system. Pay attention to the warning sign at the agitator hopper. Secure opened grill against unintended closing.

ATTENTION DANGER TO LIFE !

The hydraulic memory circuit may not be changed under any circumstances.

It is strictly forbidden to remove leaden seals from safety valves or to make any kind of changes at the hydraulic piping system.

7. If a remote control is activated, i.e. the connecting cable from the remote control to the machine is in function, the remote control may only be put down, if the "emergency stop function" is activated (press mushroom push-button switch). In order to start up the machine again (also after the elimination of faults), the emergency switch has to be unlocked in the direction of the arrow or pulled out again.

8. During pumping pauses, interruptions and repair work the remote control has to be secured against unauthorized use by e.g. locking it up in the driver's cab, the tool box, etc.

9. When getting on or off the machine, use handles and treads.

10. Keep treads, platforms, control equipment, etc. free from dirt, oil, snow and ice.

11. In order to avoid concrete splashes caused by air intake, the agitator hopper always has to be filled with concrete up to the mixer shaft.

12. Cleaning of conveying pipe by means of compressed air is done on your own risk! Due to the danger, the company Waitzinger Baumaschinen GmbH does not assume any liability. Those who still want to use compressed air for cleaning can refer to the notes on the additional sheet that can be requested, if required.

13. The max. conveying pressure may not be higher than the one indicated on the nameplate or in the test book.

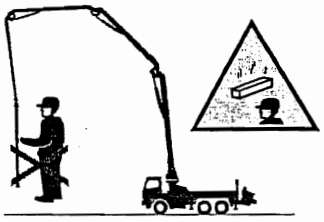

ATTENTION:

Danger of falling parts. Unauthorized people have to leave the danger zone immediately. If necessary, stop machine.

14. First aid

a) Obtain treatment notices for all possible injuries in connection with the work.

b) Injuries must be reported to a supervisor or a responsible person.

2.3.2 Maintenance and repair work

See to regular maintenance of the machine.

Attention:

The throttles and pressure control valves preadjusted in the factory may only be changed by trained personnel. It is forbidden to remove leaden seals from safety valves.

1. Retrofitting, welding and repair work on the placing boom and on all structural components going with it, on the supporting members, the fixing structure, the supporting legs, the mounting frame and on every part of the pump or pressurized parts may only be realized by specialists employed by the producer. Special attention must be paid to distributors' support and supporting legs designed as hydraulic or diesel tanks.

"EXPLOSION HAZARD!"

They are to be expected and finally found correctly realized by an expert in accordance with the valid guidelines for concrete pumps and placing booms ZH 1/573 by the employer's liability insurance association or by the legislative body of your country.

ATTENTION:

Before any electric welding work is realized, always disconnect the cable harness at the switch cabinet and branch off the battery. In order to branch off the battery, the positive and negative pole must be dismounted or – if existing – the Nato switcher on the battery must be disconnected.

Machines with electric equipment, like e.g. radio control (receiver), control (Chopp amplifier) or other, have to be disconnected before any electric welding work is realized.

2. Faults may only be eliminated and repair and maintenance work realized, if the drive motor has been switched off and the hydraulic units and conveying pipes have been relieved from pressure. Take out the ignition key!

3. Work on hydraulic units (repair or maintenance work) may only be realized after the hydrostatic pressure has been let off. It is not allowed to make any changes on the hydraulic circuit. We expressly warn you not to realize any repair work improperly. The test certificates delivered with the machine have to be kept carefully.

4. If any components from the electric, pneumatic or hydraulic system (valves, pumps, etc.) are exchanged, they have to be checked and, if necessary, adjusted in accordance with the data (pressure, stress/voltage, etc.) given on the machine card, measuring sheet or circuit diagram.

5. In order to achieve a longer service life of the conveying pipe, all conveying pipes are to be turned clockwise by 120° and the bends by 180° after approx. 6,000 m³. Observe the minimum wall thickness and the working pressure.

6. Pay attention to the fitting position when parts are dismounted and mount them correctly using the spare part sheet/service information!

2.3.3 For the working area

1. When using the machine, the engine driver is responsible for the complete operative range. The driver has to see the area completely, otherwise another person has to guide him. When leaving the machine, see to it that it is secured against unauthorized use and unintended motion.

2. Block the operative range for public transport in accordance with the regulations.

3. Wearing personal protection clothes (safety helmet, glasses, mask, gloves, etc.) is compulsory for the complete operative range, especially if people have to work with cement or with additives for mortar on a chemical basis.

It is not allowed to be within the danger zone of the machine without any permission. Warn people who are in the danger zone and stop work if they do not leave the danger zone despite your warning.

2.3.4 Mounting

ATTENTION !

The placing boom may not be moved until all supporting legs have been properly positioned. Observe safety regulations of the respective country.

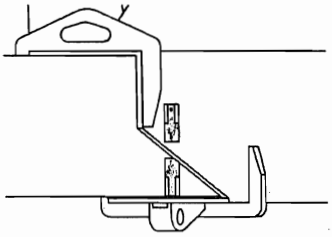

Check by means of the superimposed arrows whether all supporting legs are completely telescoped before the supporting process

1. In case of a sloping terrain, put stop blocks behind the wheels, release the brake and let the vehicle roll against the stop blocks. Then apply parking brake and support machine.

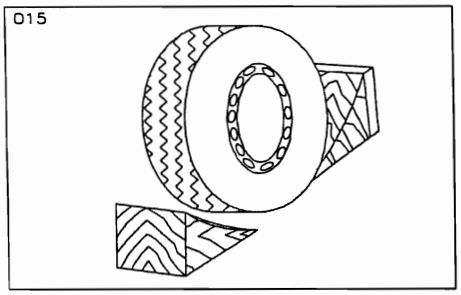

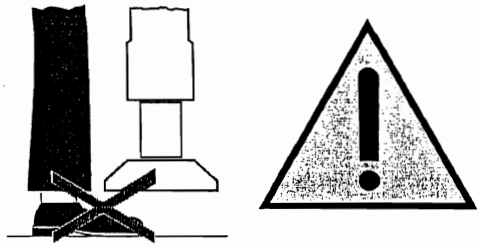

2. Danger of bruising during slewing and telescoping of supporting legs. The danger zone always has to be observed by the operator (no multiple functions possible)

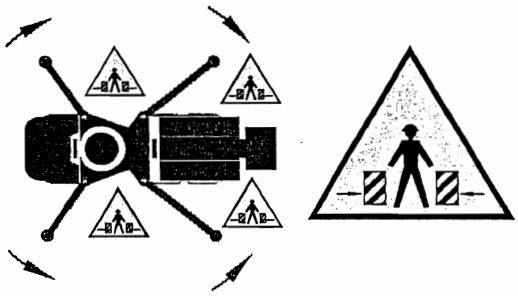

Danger of bruising when machine falls.

3. It is absolutely necessary to keep a safe distance to obstacles, like e.g. site cranes, buildings, scaffolds.

4. The machine has to be positioned so that a safe upright position is guaranteed. Observe sufficient distance to embankments, pits, ditches and similar hollows as they could cave in due to the pressure of the supporting legs. NEVER position the machine on made soil!

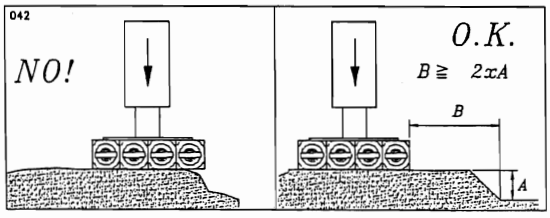

ATTENTION !

The boom may only be operated with the support completely telescoped.

Exception: If a stability control is available and activated.

The safety distance corresponds to DIN 4124:

a. In case of made and/or loose soil, the distance B is double the pit depth A.

b. In case of grown soil, the distance B corresponds to the pit depth.

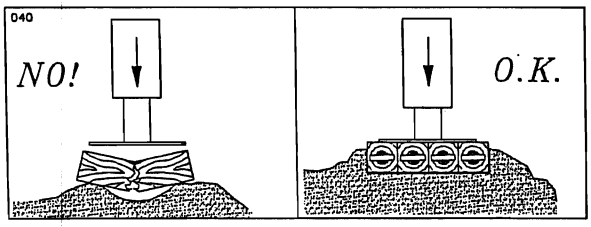

The subsoil must be even, horizontal and without any hollow spaces.

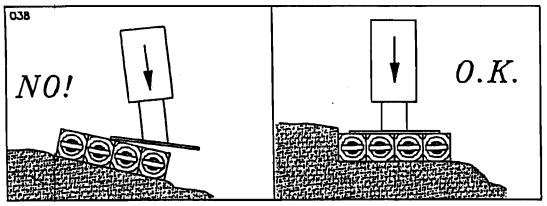

Attention: In case of sloping subsoil the support can slide down the squared beams.

5. The composition of the ground has to guarantee the stability of the machine and the placing boom. Surface pressure of the supporting legs up to 260 N/cm2 (26 Kg/cm2). If the composition of the ground is not suitable, the supporting area has to be made larger by means of backings arranged crosswise in two layers. For standard value refer to DIN 1054. See chapter 3.2.1.

Supporting legs and footprints lock mechanicly and / or hydraulicly.

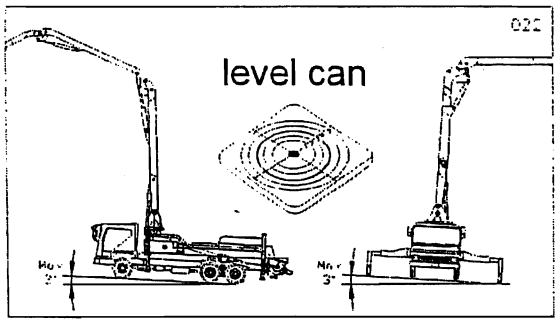

8. The machine must be adapted at max. 3° with level. In bigger deviations reverse mechanism can be overload. Beside that support safety would be reduced.

6. Before pumping starts check if pipe lines, junctions and final tube are sefely fixed.

7. Before start working check if condition of placing the pipe lines and connections are irreproachable.

9. Secure junctions with safety devices from self opening.

2.3.5 Minimum wall thickness and working pressure of conveying pipes

Observe maximum pipe weight for conveying pipes on the boom. If not otherwise indicated on the nameplate:

pipe 12.8 kg/m
bends
Y = concrete pressure in bar
X = minimum wall thickness mm acc. to DIN 2413 T3
DN = nominal diameter

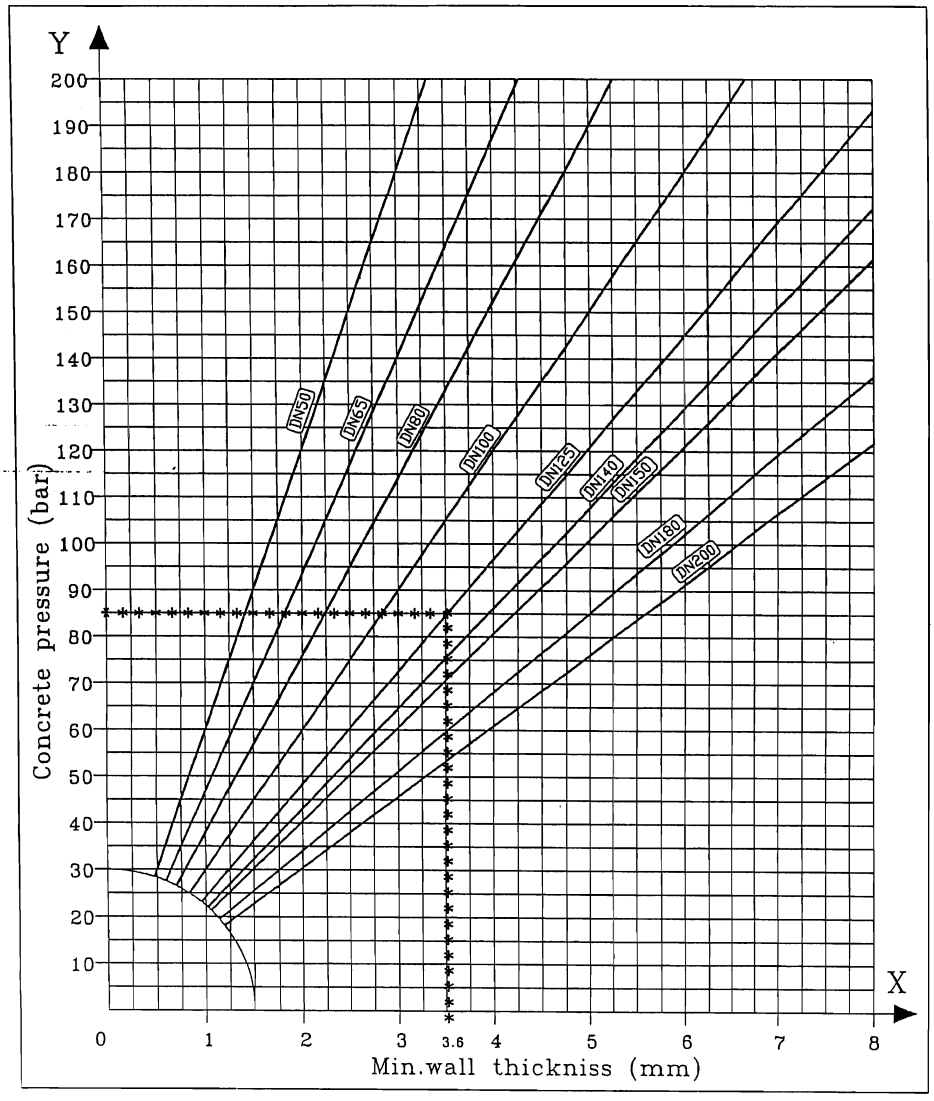

Marking of the conveying pipe: standard size
maximum pressure
code

3 Operation of the concrete pump

3.1 General

3. The attendant has to read the instruction manual when taking over the concrete pump so that accidents and any kind of damage can be avoided.

4. The operator is fully responsible for the safety each time the machine is used. Therefore he is obliged to take all the safety precautions regarding the concrete pump and to inform all the people working within the danger zone of the machine and the conveying pipe of the safety information.

5. The enclosed, separate operating and maintenance instructions are valid for the auxiliary units not described in this operating manual.

6. **Be sure that – before the machine is taken in operation – all safety devices are mounted and fully function. No hydraulic valve may be stopped due to the emergency stop.**

Description of the operating units

3.1.2 Changing of the distributor's control gear

The distributor's control gear within the shafting to the rear axle is changed from driving mode "O" to pumping mode "I" by means of the key-operated switch **02**. For this process, the ignition must be switched "on" (the motor can but does not have to run), the pneumatic pressure must be more than 5 bar and the coupling must be completely used. The indicator **18** lights when the gear is in the pumping mode. In order to work with the hydraulic system, the gear defined on the sticker **01** has to be switched into.

Attention! A wrong gear can result in overspeeding and thus destruction of the hydraulic pumps. The motor brake has to be switched off. The parking brake has to be applied.

"Control On" 17 Always lights when the ignition is on and the gear is in the pumping mode (independently of the emergency stop.)

3.1.3 Emergency stop:

The machine is equipped with four illuminated emergency stop switches **23** plus an emergency stop at the remote control. Every emergency stop switches off all functions and motions and the hydraulic memory is run down (as an option, the motor can be stopped when emergency stop is activated). The activated emergency stop is indicated by means of the flashing emergency stop light **21** on the operator's desk and at the activated emergency stop (except for remote control). After the danger is eliminated, you can unlock the corresponding emergency stop by pulling it.

Attention! After the emergency stop has been activated, you have to restart the control by using the horn **22** (reset). If pumping/suction (desk or remote control) was switched on during the emergency stop, this function is blocked and has to be restarted by switching it off and on again.

3.1.4 Selector switch for operating mode:

You use the key-operated switch **09** to change between "desk", "remote control" or "stability on". If the cable for the cable remote control is plugged in, the system automatically turns to cable remote control. If the remote control mode is chosen, the corresponding remote control has to be switched on, otherwise the control system activates the emergency stop. The desk functions: pumping/suction, number of strokes are blocked during the remote control mode. **The key should be removed during operation so that the support cannot be operated or the stability system cannot be switched off by any unauthorized person.**

3.1.5 Motor start / stop, speed + / -:

The vehicle's motor can be started from the desk via the switch **08** or the remote control (only if control in ON and/or radio system is ON). Switch **10** stops the vehicle's motor and blocks a restart for approx. 10 seconds.

By activating switch **16**, you adjust the speed of the vehicle's motor between no-load speed and maximum speed within 10 seconds.

3.1.6.1 Pumping / Suction via desk:

The key-operated switch **09** has to be in the "desk" position. Switch **13** switches on the pumping or suction process. The number of strokes is defined by the stroke pot **12** and the motor speed. The activated function is indicated via the control light **14** (also during the remote control mode).

Attention: When the hopper grid is open or after the emergency stop has been activated (when the switch pumping/suction is being used), the pumping/suction process is blocked.

Attention: When the hydraulic oil temperature exceeds 80°C, the pumping process is stopped and the temperature indicator **15** on the desk as well as the signal lights **31** (flashlight) on the boom's support are activated. It is still possible to suck back the concrete. Suitable measures have to be taken as fast as possible to cool down the hydraulic unit.

3.1.6.2 Pumping / Suction via remote control:

The key-operated switch **09** has to be in position "radio" and/or "stability on". The function is preselected by means of the switch pumping/suction. By using pump on, it is switched on. The number of strokes is determined by the stroke pot of the remote control.

Attention: When the hopper grid is open or after the emergency stop has been activated (when the switch pump on is being used), the pumping/suction process is blocked and has to be restarted by switching pump on off and on again.

3.1.6.3 Emergency mode Pumping / Suction

Attention: This mode may only be used if the pumping/suction process does not function via the standard control system!
If the sensors break down, you can only work by manually operating the valves also in this mode.

3. **Emergency mode pumping via cable remote control:** Position emergency mode pumps **41** to I. Operate number of strokes and pumping/suction via cable remote control.
4. **Emergency mode pumping via desk:** Position emergency mode pumps **41** to I, adjust number of strokes via manual wheel **12** on the control block. Activate pumping/suction via switch **13**.
5. **Emergency mode via control block:** If the control system breaks down completely, the concrete pump can also be operated manually directly on the hydraulic control block. The number of strokes is adjusted on the manual wheel **12**. The pump is manually operated via the solenoids **Y5** and **Y6**. When the water tank cover is open, the mode can be changed shortly before each stroke is finished. In order to start the suction process, valve **Y8** has to be stopped.

Attention: Storage valve charging **Y4** has to be activated. When the control system breaks down, closening can be established. **After work has been finished or before the hopper grid is opened, the catch has to be released.**

3.1.6.4. Leakcompensation

Short strokes might occur if there is an internal leak on the drive cylinders. Therefore the drive cylinders have to be run in final position regularly. In the final position, the hydraulic system has max. pressure. Before doing so, the motor has to be set to a higher speed and the

stroke pot has to be adjusted lower. The drive cylinders are run in final position when switch **40** test cyl. A-B is activated. Press down the switch until both piston rods stand still.

3.1.7. Agitator, water pump:

3.1.7.1 Agitator:

Switch **06** switches on the agitator (even when emergency stop is activated). The conveying direction of the agitator should always be towards the center. The outward direction is only used for a short period of time to losen up obstructions or to remix the concrete. When the hopper grid is open, the agitator stops automatically.

An emergency service is possible if valves **Y9** is activated with lever **19.**

Option: When the hydraulic pressure of the agitator is exceeded, the system automatically changes over to reverse for 60 sec. This is repeated until the cause for the increased pressure has been eliminated.

3.1.7.2. Agitator jogging skip

For easy cleaning, the agitator can also be turned by means of the push-button switch **20** even if the hopper grid is open.

Attention: Only you should push down the switch. It is indispensable to stop the motor during work within the hopper.

3.1.7.2. Water pump:

Switch **04** activates the water pump, which is indicated by the green LED lamp **19.** When the water level is too low, the water pump stops automatically. Red LED lamp **03** (option).
Attention ! If the agitator is still switched on, the capacity of the water pump decreases.

Option: The high-pressure water pump or the compressor, which are available as an option, are activated via the same switch **06.**

3.1.8. Vibrator:

Selector switch **05** activates the vibrator. Two operating modes are possible:

position I = continuous operation
position Π = operation on with pump switched on.

3.1.9. Horn/Reset:

Indepentently of the operating mode, the horn can be operated by means of switch **09** from each place (switch **22** or remote control). In case of an emergency stop, the control system is restarted (reset), if all emergency stops are unlocked.
Attention ! If the key-operated switch **09** is in position "radio" or "stability on", the emergency stop at the remote control (radio or cable) must also be unlocked.

3.1.10. Light:

Light switch **07** switches on all control panel lights **28** as well as the lighting of the supporting legs (option) and the spotlight. The flashing alarm lamps on the supporting legs are always switched on. They only have to be attached to the corresponding supporting leg.

3.1.11. Stability automatic:

The stability automatic checks whether the angles of the supporting legs and the front telescope jibs are in their final position. Like that, the working range is calculated. It is compared with the actual boom position and before it is passed over, the slewing motion of the boom is blocked **(only possible in the radio remote control mode)**. Five degrees before the slewing motion is blocked, the limitation is indicated via the flashlight **33** on the connecting point and on arm 3 (4) and the slewing motion is slowed down. Display **11** shows the admissible slewing range (see description of display).

Important: Before the boom is operated, there must be a change from support to boom via the remote control so that the admissible operating range is taken over to the stability automatic.

By means of the key-operated switch **09**, the stability control can be switched off. The indication via flashlight **33** continues, the slewing motion, however, is no longer stopped. The display shows the message "no stability". **The key should be removed during operation so that no unauthorized person can switch off this function.**

Attention ! When the machine is not fully supported, the stability automatic must absolutely be switched on. German employer's liability insurance association.

3.1.12. Display:

The display **11** is provided to show various machine data. When the control is switched on, the message "Hello customer" "Control o.k." appears. Fault messages are automatically displayed (e.g. emergency stop, oil temperature too high, etc.). By using the ↵ key, you scroll through the display. Like that, information like e.g. number of strokes, oil temperature or admissible slewing angle range can be checked. In order to detect any faults, you can check the inputs and outputs by using the keys ↑ and ↓. The key → shows the first position of the selected area. By using ↑ and ↓, you can scroll through the program. By using ←, you leave the area again (a more detailed description is available in the control operation manual)

3.1.13 Pressure gauge:

The pressure gauge **24** shows the current pressure of the agitator or the water pump (options: high-pressure water pump and compressor). The maximally adjusted pressure is 210 bar.

The pressure gauge **25** indicates the current pump pressure. When 350 bar is reached, the hydraulic pump has turned to "0". A possible cause can be a gag in the conveying pipe.

The acumulator pressure of the pressure gauge **26** always amounts to 180 bar (except for emergency stop). When the S-pipe slews, the pressure is reduced by approx. 50 bar for a short period of time.

Attention ! For maintenance work in the hopper or on the hydraulic system, it is absolutely necessary to check the pressure gauge 26 to see whether the accumulator pressure has been completely released. Even with the motor switched off, the pressure can remain.

The pressure gauge 35 shows the current hydraulic pressure at the placing boom.

3.2 Mounting of the placing boom

Before the concrete pump is mounted, the construction site has to be made safe. The subsoil where the outrigger is to be placed must be even and checked regarding its soil bearing capacity. The hand brake must be put on (see safety regulations in chapter 2).

3.2.1. Outrigger Operation

Warning!

There is a high risk of accident (bruising) when the outrigger is operated. The attendant always has to see and carefully observe the moving parts. There must not be any people or objects within the slewing range of the outrigger.

1. For safety reasons, you have to operate the push-button switch **29** with your second hand, while operating the outrigger. In outriggers' command block **32, 36** all functions bellow are moving outrigger outgoing, above all functions to way in. The functions swinging out and front telescoping can be operated simultaneously. Like that, the front outrigger is automatically run in its final position. All motions of the outrigger are blocked in the driving position. **Before you start driving the vehicle, you always have to check whether the catch is locked into place.**

Attention: If the selector switch operating mode 09 is in position remote control, you have to use the remote control to switch over from boom to outrigger.

Emergency service: If the control breaks down, the outrigger can be operated manually at the boom control block **34**.

3.2.2 Mounting of outrigger

2. All the outrigger legs have to be swung out and telescoped completely.
When the telescope jib is in its final extended position, there is a second catch, which has to be locked into in working position. The superimposed arrows will show you whether the outrigger is completely swung out.

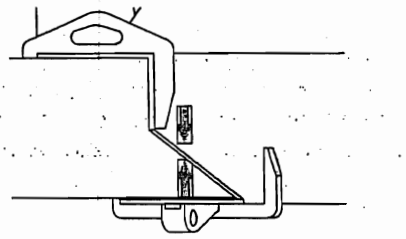

3. The supporting cylinders are extended until the front axle is freely hanging up in the air. The rear axles must still slightly touch the ground (brake effect).
The concrete pump may, however, not be more inclined than 3° in plane.

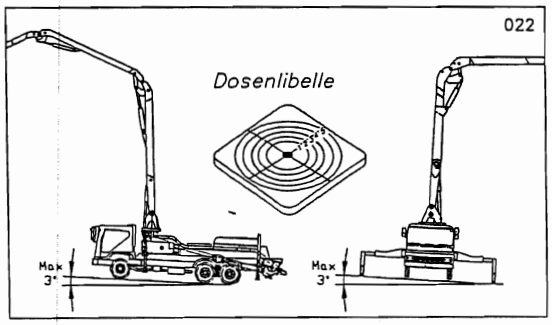

Attention ! Observe admissible soil pressure.

Fig. Table

3.2.3 Placing boom Operation

Attention: Only open the placing boom, when the machine is fully supported. Never move the machine when the placing boom is folding out.

1. Normally, the placing boom is only moved via the remote control (radio, cable). All boom functions are proportionally moved. **The selector switch outrigger/boom must be in position boom.** The maximum boom speed can be reduced when you use the switch 50%/100%. 50% for pumping, 100% for folding in and out. The placing boom can also be operated manually at the boom control block **34**. To do so, the preselector boom/outrigger must be operated in the direction of the boom for each boom motion.

Attention: In case of manual operation, all safety includings as well as emergency stops are switched off.

3.2.3 Mounting of placing boom:

Attention! When you open and fold in the placing boom, the boom can hit many places and thus damage other parts. Therefore always observe the right sequence.

1. Extend arm 1 until catch hook (if existing) works loose and arm 2 can be opened without any danger.
2. Turn placing boom in the position of the endhose to open it.
3. Open arm 2, arm 3 and arm 4 (arm 5) by 90° respectively (stick to this sequence).
4. Move arm 4 (5) in horizontal position approx. 1 m above ground.

5. Loosen endhose.
6. Put placing boom in working position..

Fig. Endhose

3.3 Pumping mode

3.3.1 First pumping

When you work with short, bright conveying pipes at the inside, fill in several buckets of laitance - depending on the hopper size - shortly before you start pumping and while the agitator is turned on. Before doing so, put in two sponge balls so that the laitance moistens the complete pipe. Pump slowly until the full concrete jet comes out of the endhose.

Attention:

The max. conveying pressure may not be higher than the one indicated on the nameplate or in the test book.

2. If you work with new and long conveying pipes, the frictional resistance is higher, therefore it is necessary to use enough laitance for the first pumping.

3. Pump several strokes, switch on agitator.

4. Strongly mix concrete in the truck mixer with the highest possible speed, when doing so, see to constantly processed concrete mixtures. After reagents (accelerator, restrainer) have been added to the concrete on the building site, keep mixing the concrete for at least four more minutes.

5. Fill the concrete from the truck mixer and/or bin into the agitator hopper and keep pumping via the concrete pump.

Attention:

If the pipes are rusty on the inside (high pipe resistance), only increase the conveying capacity continuously after several m^3.

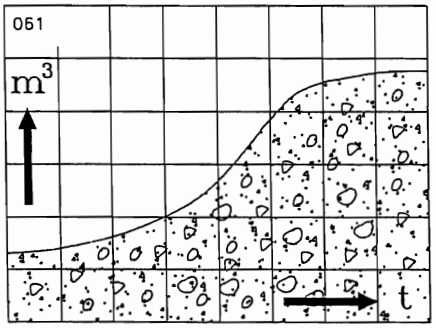

6. In situation of obstruction concrete should be immediately pumped recurrently into the mixer and blend it. Advance pumping direct, when switch conveyor cylinder and pipe are automaticly directed. Do repumping carefuly.

7. Obstruction causes :

   a) mud was too lean

   b) not enough mud has been used

   c) leaking pipe switch

   d) leaking conveyor pipe lines

   e) concrete remmants in pipe switcher and conveyor pipe line

   f) negative concrete structure

3.3.2 Pumphing instruction (depend of medium)

1. During conveying poor concrete for pumping, mixer axis has to be permanently visible! „Negative" concretes (extremly stiff mixtures poor with send, light concrete etc.) allows better transporting, when mixer hopper is filled only by lower edge of mixer axis. During this procedure concrete pump is sucking up the air additionaly into conveyor cylinder and concrete is beeing transported in procedure air-plug. Careful at blockage!

2. During pumping breaks, conveyor pipe line is releasing pressure with short backwards pumping (2-3 paces). Frequently pump

forward-backwards. Never leave conveyor pipe line under pressure.

3. At extremely fluent concrete with high contents of large grains, which aspire to bleed, during pumping brakes empty the hopper as much as possible.

4. During longer pumping brakes, pump concrete recurrently into the mixer hopper, mix and repump it.

5. During pumping breaks switch off power engine, so that vibrations can't cause decompsition of concrete. In intervals of ca. 10-15 minutes move concrete completely by pumping forward-backward.

   Never impress by force stired concrete or concrete which started creating lumps into convey pipe line.

6. Specialy at concrete with ddecreased possibility of binding water (tend of bleeding) prevent breaks in height transport, save as that in retransport leave the pump unconditionaly in recurrent pumping, until pipe switch finishes complete pace. Afteer that redirect at forward transport .

7. Air ingredients in conveyor pipe line may be dangerous, because compricared air at the end of conveyor pipe line becomes sudden free and concrete explosivly is running out. Air ingredients appears specialy in pumping preparations through air sucking in not enough concrete filled basket and at extension conveyor pipe line.

3.3.3 Pumping instructions (depends of machine)

1. Number of maximum engine rotations may not be exceeded, because hydraulic pump will come in excessive number of rotations. Permit number of rotations see machine card.

2. Pay attention at pistons' pace ab ridge and equalize as need it.

3. If at long lasting work with high demands, oil temperature rises below 80°C, immediately add fresh water into water box.

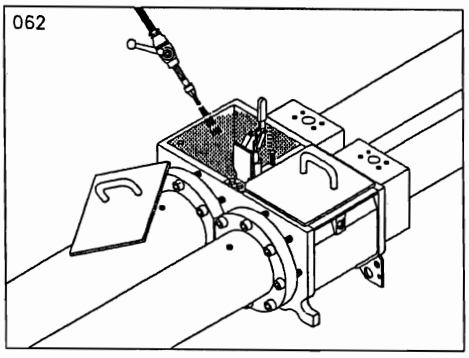

During further temperature rising change water current. Search and remove causes of overheating. When oil temperature rises below 55°C termostaticly regulated ventilator is switching on.

4. Do not sprinkle oil tank with water. Formation of condensed water and damage of hydraulic pump will follow. If additional cooling is not enough, direct water jet to the drive cylinder.

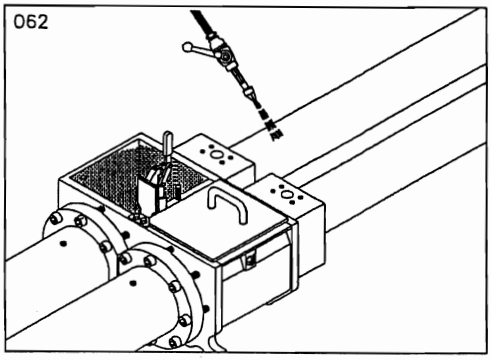

5. All pumps has thermo-electrical switching off. At oil heating below 80°C pump will automaticaly will be switched off and red control light is on the command cupboard.

Measures:

a) Switch on the pump at tower position "SWITCHED OFFS". Green light is turning off.

b) Don't stop the engine. Oil cooler must be in function.

c) Restore the water in water box.

d) When red control light switch off, turn on pump. With reducted output slowly pump it.

e) After pumping finishes find cause of oil overheating. Remove the error – see section 5 searching errors.

f) Temperature sensor for termo-electric switch off is built-in hydraulic tank.

6. In intervals of powerfull engine load never switch off power engine at once, so cool it first in emphty pace, diesel engine ca. 1000R/min. This is specialy important for TURBO engines.

7. Number of engine rotations allways adjust below minimum number of rotations (500-700 R/min.).

8. For damages caused by serving mistakes producer is not taking any guaranty.

3.4 Cleaning

3.4.1 Cleaning by sucking

1. Clear out mixer hopper by pumping till upper edge pipe of conveying cylinder, than switch off the pump.
2. Piece of water soaked sponge for cleaning, impress at way out of endhose.
3. By means of "reccurent transport" suck in reccurently the cleaning sponge, by that easily bang conveyor pipe line with hammer, until cleaning sponge passes place of banging (recognized banging in hollow), than switch off the pump.

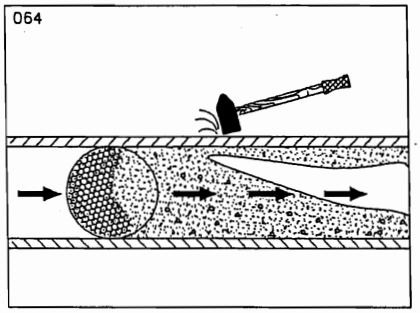

4. Open accessory hole for cleaning at rising duct, turn and with wedge inside close it again.
5. Rest of medium suck in into mixer hopper, turn off the pump, open cleaning hole and take out cleaning sponge.
6. At longer conveyor pipe lines repeat the cleaning. One reccurent sucking is not enough.
7. If protection grate has safety turning off, mixer and S-tube remains until protection grate is open, during cleaning close for a while protection grate, at the right time allow turning on the pumps direct step, lift again protection grate. Bolted protection grate, stays close during cleaning.
8. Rest of medium remove through cleaning hole. S-tube, mixer hopper, conveying cylinder, and water box carefully sprinkle. Clean rest of machine and sprink with mixture of oil and diesel or oil.
9. Completely clear out water box, water pump and washing out chamber at risk of frost. Washing out chamber must be cleared out at night and weekends at normal temperatures and during longer pumping breaks.

3.4.2 Cleaning with under pressure water

Machine cleaning with under pressure water is already tested method.

1. Mixer basket empty pumping as much as possible. Put position on pump "backwards conveying" and conveyor pipe line with 1 – 2 paces of reccurent pumping release the pressure. Turn off the pump.

2. Rest of medium remove through cleaning cover hole. By lift uo conveying, close shut-off valve, open cleaning hole at rising duct.

3. Turn on again pump in position "backwards conveying" and sprinkle with water tube fixed jet for sprinkling from cleaning hole.

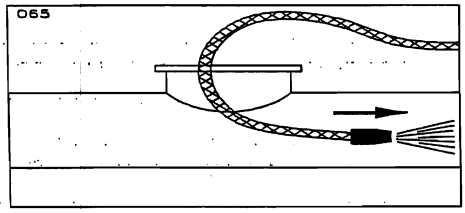

Be careful that tube should not be cut at S-tube directing. Sprinkle as much long as clean water comes up from conveying cylinder, then turn off the pump. Clean mixer hopper and all parts which in that area are coming in touch with medium.

4. 2 - 3 cleaning sponge water soaked impress into cleaning hole and close it – cleaning

cover and mixer hopper fill with water.

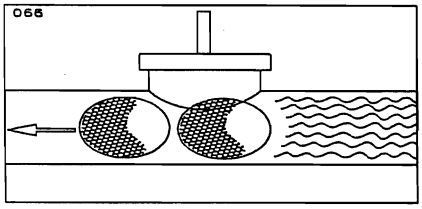

5. Turn on the pump at "backwards pumping". Conveyor pipe line medium, filling of one hopper is not enough, turn on pump before air got sucked and hopper refill with water. Then medium gets forward until cleaning sponge get out from final tube. Be careful that running water does not flow in mold .
6. With backwards conveying suck up the water into hopper.
7. If protection grate has safety turning off, mixer and S-tube remains until protection grate is open, during cleaning close for a while protection grate, at the right time allow turning on the pumps direct step, lift again protection grate. Bolted protection grate, stays close during cleaning.
8. Rest of medium remove through cleaning hole. S-tube, mixer hopper, conveying cylinder, and water box carefully sprinkle. Clean rest of machine and sprink with mixture of oil and diesel or _____ oil.
9. Completely clear out water box, water pump and washing out chamber at risk of frost. Washing out chamber must be cleared out at night and weekends at normal temperatures abd during longer pumping breaks.

3.5 Exchange of wearing parts

3.5.1 Exchange of wearing plate and ring

ATTENTION: During works in hopper and in space of S-tube always turn off engine and pull out ignition key.

1. Remove iron plate on protection level (1). Through bolts (2) and (3) loosen every for 15 mm and unburden S-tube.

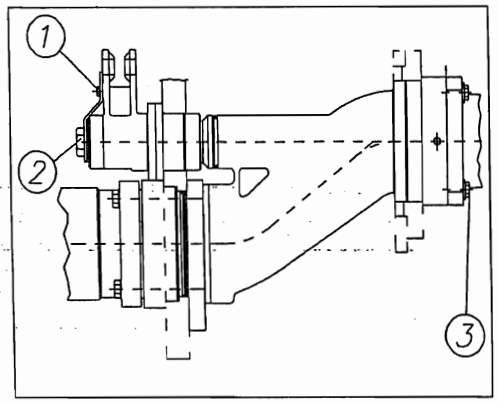

2. Substitate free wearing plate removing 2 bolts (4) and tighten it.

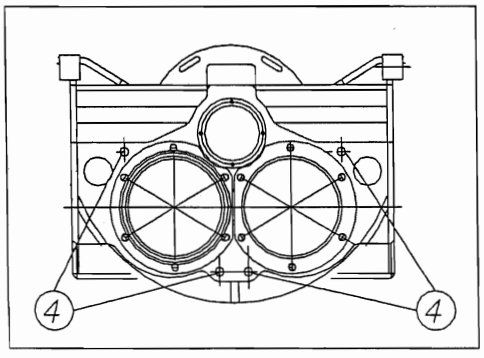

3. S-tube turn to the other side.

4. Second wearing plate take out removing 2 bolts (4).

5. S-tube turn back and exchange wearing ring (5).

6. S-tube turn at just installed wearing plate and install second wearing plate.

7. S-tube tighten again with 4 bolts (3).

8. Tighten the bolt (2) with hand so that turned lever in laying without split. Loosen bolt on at least 1/6 turns and install protection iron plate.
   ATTENTION: Bolts (3) and (4) tighten with turned moment according to list.

9. Test work.

3.5.2 Exchange of conveying pistons

ATTENTION: During works in washing out chambre always turn on the engine and pull out ignation key. Never put hands in washing out chambre while engine is working. Procedure of hydraulic cylinder always with manual activated valve at low number of engine turns and reduced number of paces.

1. Empty washing out chambre. Remove protection bars.

2. Take one drive cylinder in final position with activating valves Y3 and Y4.

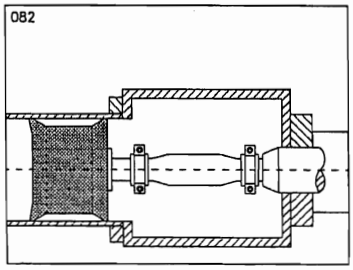

3. Remove clump – scaly junctions (2).

4. Push back conveying piston by force through lever for ca. 5 mm in direction of conveying

remove distanc-piece (3).

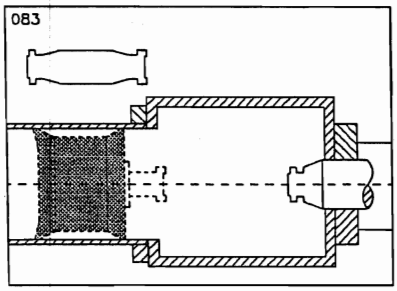

Drive cylinder carefully lead out until touches flange. Install one scaly junction.

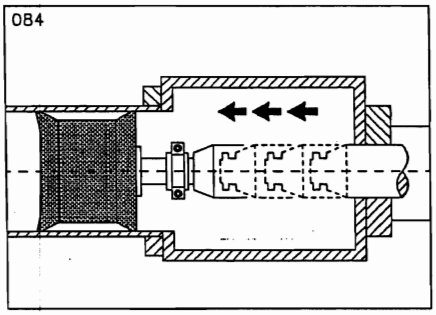

6. Drive cylinder lead in again, scaly junction (2) and conveying piston take out.

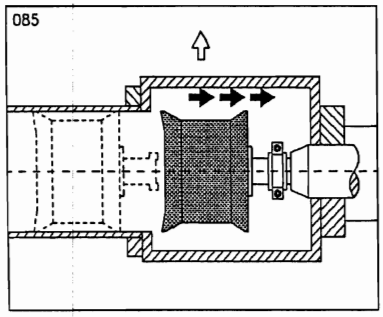

7. New conveying pistons lubricate well and install with scaly junction (2).

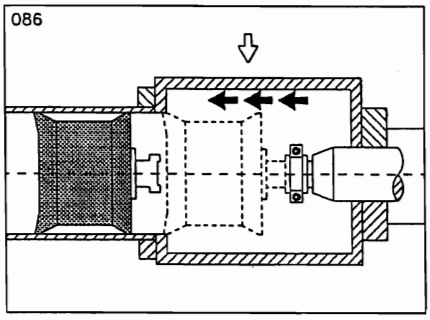

8. Drive cylinder, conveying piston lead out that way that has enough place for distanc-piece (3).

9. Remove scaly junction (2) and lead out drive cylinder into final position.

10. Distanc-piece (3) at drive cylinder install with scaly junction (2).

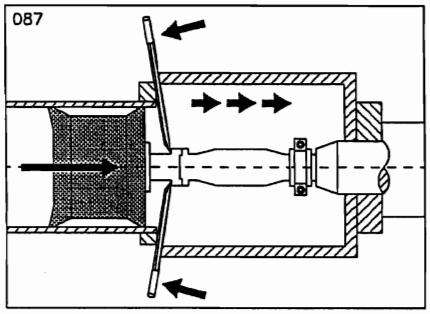

Push conveying pistons by force with lever to the distanc-piece (3) and install scaly junction (2).

3.5.4 Exchange of conveying cylinder / rotating

1. Dismantle conveying pistons (see 3.5.3).
2. Both drive cylinders lead out in final position: swinging duct at lead in drive cylinder loosen and hang at dish. Easily lead out drive cylinder in final position with manual valves Y5 + Y6.
3. Dismantle axis, build washing out chambre.
4. 26 x 3 bolts (1) remove and build conveying cylinder (it's best to use fork-lift).

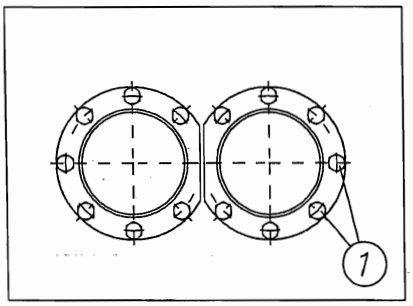

Valve case lift by crane.
ATTENTION: During lifting be careful that no tube cable became squeeze.

5. Build or rotate conveying cylinder.
Directions: To enlarge lasting of conveying cylinder, they can be turned for 180°. It should be careful that conveying cylinder is turned on time. It working out is already huge, conveying cylinder must be exchanged.
6. Install conveying cylinder in reverse order.
7. Install conveying pistons (see 3.5.3) and swinging duct.
8. Lead out right drive cylinder slowly with hand and activating valve Y5 or switcher 40. (see 3.1.6)
9. Drive cylinder ventilate. (see 3.??)
10. Test work.

3.5.5 Exchange mixers' components

1. Remove bolts (2).
2. Exchange mixers' components (1). Check if tight places are clean. Right element of a mixer must be install to a left one turned for 90°.
3. Install bolts (2) and retight torque moment like in the list. This bolt must always be exchanged.

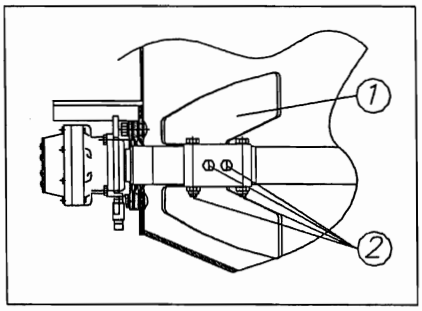

3.5.6. Exchange of mixers' blocks

1. Build mixers' components.
2. Right engine (4) ca. 10 mm pull out and take off mixers' axis (3).
3. Remove safety ring (5)and pull out engines (4) left and right. Be careful that hydraulic tube is not twisted.
4. Remove bolts (6) and take out distanc-bases with blocks (7).
5. Change and again install bases (7). Split between both bases fill with grease completely.
6. Install in reverse order engines (4) and axis (3) as well mixers' components (1).

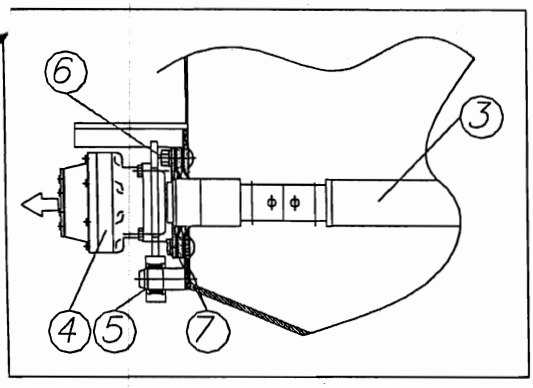

3.5.7 Exchange of wearing mixers' capsules

1. Remove engines (4) and put off in safe.
2. Cylinder piston emerge outside (8), remove base (9) and bolt (10) turn out.
3. Impress axis (11) by lever.
4. Divide wearing capsule (12) from basic axis (11) and remove it.
5. Clean axis and lubricate with Loctite. New wearing capsule heat at 200°C and place it quickly.
6. Install mixer in reverse order hole for piston

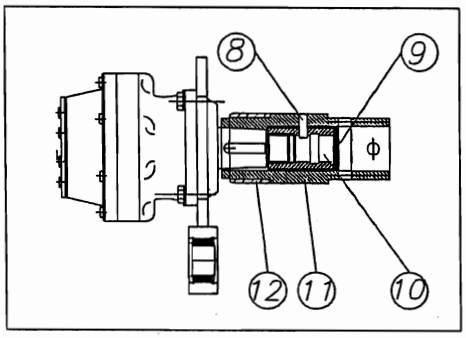

cylinder (8) must be drilled.

4 Maintenance

4.1 General instructions

1. All agregates maintenance like for example power engine conduct maintenance according to regulations of in question product.
2. During all maintenance works follow the instructions of safety section 2 and instruction for serving section 3.
3. Concrete pump must be checked at least once a year from qualified person. see section 2
4. Filter must be always changed when display of dirtyness hot oil is in red area.

4.2 Daily maintenance

1. Filling oil quantity, fuel grease and water is controling and filling by need.
2. Check all filters display of dirtyness.
3. Check parts which conduct concrete, change weared parts.
4. Check weard state of conveyor pipe line banging or with measure device, wall thickness and change wear parts. At least thickness according to diagram „at least wall thinkness" section 2.
5. Check lubricate device. Warehousing of S-tube and conveying piston lubricate with greace.
6. Visialy check sealed hydraulic ducts and bolt conections.
7. Check final tube safety device and safety devices at all scaly junctions.

4.3 After first 50 work hours

1. According to wehicle instruction do the maintenance.
2. Clean all filters, in fact change them.
3. All bolt conections check according to list of torque moments section 3.6. Check bolts at cardan axis.
4. Make oil change divide and turn mechanism.

4.4 Weekly maintenance

1. Make daily maintenance works.
2. Lubricate all lubricates places and slip areas on boom, boom outrigger, pump and rotating ball conections. See lubricate list.
3. Check oil level turned mechanism.
4. Plugs at S-tube and mixer visialy check on damaging.
5. Check S-tube position and adjust if need it.
6. Condensended water in hydraulic tank release after 24 hours through ball tap, until oil gets out.
7. Check functioning of safety devices. (for example emergency stop, protection grate and covers).
8. Test steel construction of boom, boom support and outrigger on cracks.

4.5 Every 500 work/hours

1. Make wekly maintenance works.
2. Clear out hydraulic oil, hydraulic tank wash out and according to oil list fill with hydraulic oil.
3. Change filter cartridge in tank hydraulic boom and pump. (Clean solenoidic stick.)

   Attention: Use only original filter cartridge. Order number in spare parts mechanism.
4. Check oil level divide mechanism.
5. Make control of S-tube wearing. Pay attention that at least wall thickness is 8 mm.
6. Make control wearing of conveying cylinders. Stronger conveying cylinder after 2 mm wearing (4 mm diameter), chrome conveying cylinder at remain layer of chrome 30µm turn to 180°. Clean diesel prefilter.
7. Check storage pressure, if need it fill according to list.

   Attention: Only use nitrogen. For checking and filling, device for storage checking will be needed.
8. Check pump and boom pressure to a list..
9. Check number of engine rotations and pump functions to a list.
10. Check tight conection of conveying pistons.
11. All bolts on ball turned balls conection check to a list of torque moments section 3.6.
12. Check bolt safety devices and fixness conveyor pipe line on boom.
13. Clean air filter shell.
14. Change filter for airing hydraulic tank.

4.6 Every 1000 work hours, or per year

1. Make maintenance at 500 work hours.
2. Checking of all mechanic and hydraulic parts from qualified person.
3. Checking of real status all reliable safety devices.
4. Check of beside split between theeth and ball turned conection on boom.
5. Check pace of ball turned conection.
6. Make oil change in turned and transport mechanism.

4.7 Filter exchange

Attention! It is allowed to change filters only when engine is turned off and hydraulic device are without pressure storage pressure or hydraulic pressure is producing with static concrete pressure in conveyor pipe line). Placing boom must be in transport position or supported.

During filter change some of hydraulic oil is leak. So prepare reception pot. Filter change do as quickly as possible so that unnecessary dirtiness can not enter in hydraulic system. Because of that, before filter opening is needed to prepare exchange filter element, O-rings, cleaning rag. **After every filter exchange oil level must be checked.**

High pressure filter boom and hydraulic pump:

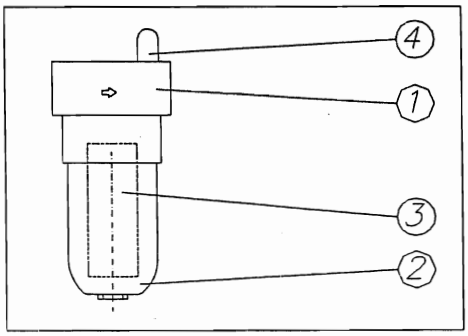

If dirtyness display red ring (4) then filter element should be exchange.

1. Filter case (2) in clockwise turn out.
2. Filter element (3) pull out down from case (1).
3. Clean filter case (2), O-ring change and lubricate coil and O-ring.
4. Filter case fill with clean oil.
5. Put filter element.
6. Filter case install and tighten with ca.150Nm.

Suck filter:

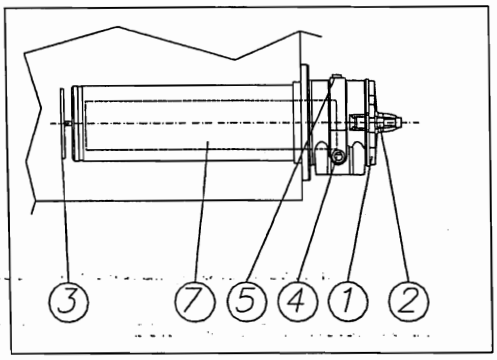

1. Nuts (2) loose and turn out till end of screw.
2. Pull out cover (1) so it lays aginst on screws (2). That way floor valve (3) is closed.
3. For second filter repeat steps 1 and 2.
4. Oil in filter case through bolt (4) and bolt for diring (5) empty at acception pot.
5. Turn slowly cover and pull out complete filter element (7).
6. Exchange filter element. Clean solenoidic stick. Check both O-rings and exchange in case of damaging.
7. Bolt for airing and bolt for releasing close without leak. (bouth filter)
8. Install cover with filter elemnt and tight nut.

4.8 Turned mechanism

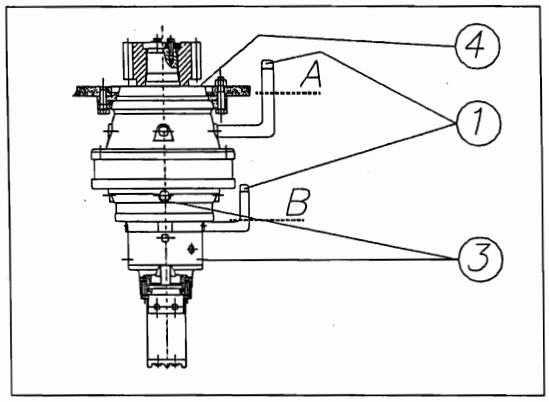

Attention! Turned mechanism has 2 separate oil bathrooms. (oil situation A and B). Use oils for transmissions according to lubricate list!

1. Remove airing bolt (1)and completely release oil through bolt (3).
2. By very dirty oil fill transmission completely with washing out oil and turn distributors few times. So deposit dirtyness mixes with oil in transmission. Then repeat ste 1.
3. Close releasing bolt. Open bolt (4) airing. Fill with transmission oil through bolt openings till oil level A and B.
4. Installed bolt for blowing out and airing.

4.9 Dividing section

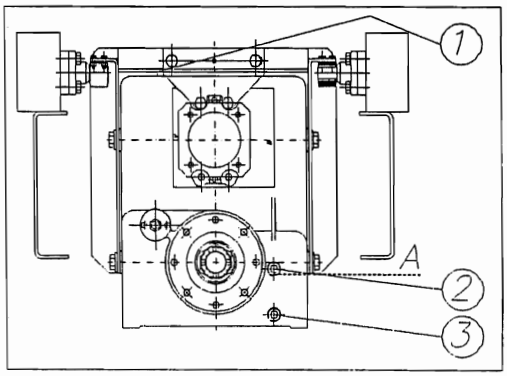

1. Bolt filling (2) level and bolt for vent (3) remove and vent the oil into receiving pot.
2. 2. At extremely dirty oil fill transmission urgently will oil for washing out to the level A and let hydraulic to work for a while. That way stratums of dirtyness are blending with oil in the transmission. Repeat procedure at point 1.
3. Clouse vent bolt. Pour up slowly transmission oil with hopper across vent bolt (1) until oil comes out at bore hole of oil level bolt.
4. Tighten oil level supplement bolt.

4.10 Checking of wide split between cog and cogged wreath

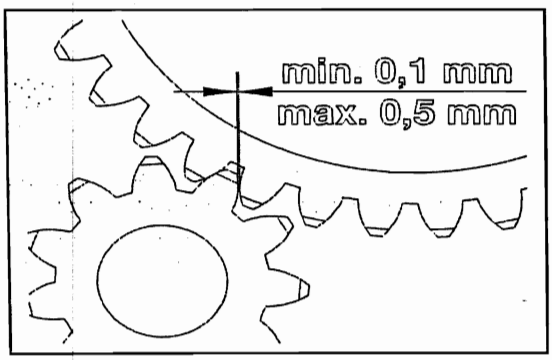

1. Dismantle cog cover.
2. Slowly turn boom into flat position so that wide split has free pace.
3. Measure distance between cog sides with measure instruments.
4. If the pace is too big, transmission or rotating ball conection must be checked from qualified person.

4.11 Wearness measuring of rotating ball conection

Wearness in ball turn link can be measured in enlarge pace between outside and inside ring.

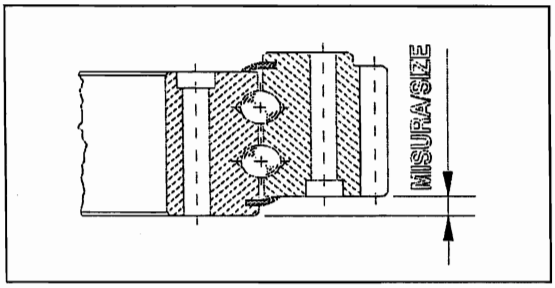

Measuring must be conducted at 2 points (burden side and unburden side, see picture bellow).

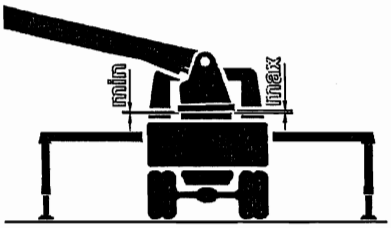

Diference between both measures is exact value of measured pace. This value must be carried into boom control book at every boom check.
Maximum permit value must not be exceeded.
See list bellow.

Diameter uncoil	Ball diameter				
	20	22	25	30	40
1000	1,8	1,9	1,9	2,0	2,5
1250	1,9	2,0	2,0	2,1	2,6
1500	2,0	2,1	2,1	2,2	2,7
1750		2,2	2,2	2,3	2,8
2000			2,3	2,4	2,9
2250				2,5	3,0
2500					3,1
Measures in mm					

4.12 Checking sensor functions:

State of feeding switcher can be checked in two ways.

1. Directly into feeding switcher or in plug there are one or two LED lamps.

   One LED: green = turned on

switcher.

For two LED`s: green = power on
yelow = switcher on

2. On display **11** it's easy to establish sensor state through menu searching (above arrow), check analog entrance, check paces during breaks, check digital entrance. During that you have to know belong enter number (accompanying machine card).
3. Angle sensors for boom reverse angle, supporters' angle left and right forward it's possible to show analog entrance at display.

4.13 Bolts tighten torque

Following values are valid for bolts tighten torque at DIN 912, 931 and 934 at slicking factor from $\mu = 1{,}25$ (easly lubricate).

Thread size	Tighten torque 8.8 Mn	Tighten torque 10.9 Nm
M8	23	32
M10	46	64
M12	80	110
M14	125	180
M16	195	275
M18	270	390
M20	385	540
M22	510	720
M24	660	930
M27	980	1400
M30	1350	1850

4.14 Lubricate list

	Engine in summer 🕮	Engine in winter 🕮	Hydraulik oil Standard	Hydraulik oil Tropic country
Type	HD SAE 30	HD SAE 10W	HLP 46	HLP 100
Aral	Aral Super Kowal Aral Turboal	Multi Turboal 15W40	Vitam CF 46	Vitam CF 100
BP	Vanellus- T Energol HD-S	Visco Static	Energol HLP 46	Energol HL P10
ELF	Performance 2B Performance 3C	Multiperformance 3C	Olna 46	Olna 100
Esso	Essolube HDX Essolube HDX plus	Essolube XD 3	Nuto H 46	Nuto H 100
Fuchs	Renolin HD Titan HD-Super	Titan Universal HD	Renolin B 15	Renolin B 30
Mobil	Delvac 1230	Delvac 1210	DTE 25	DTE 27
Schell	Retolla X Rimula X	Myrina 15W40	Tellus Öl 46	Tellus Öl 100
Fanal	Super HD Motoröl HD Motoröl	Indol C	Salvo MWS 46	Salvo MWS 100
Agip			Arnica 46 L-HV/46	Blasia S 220

🕮 accept regulations in question engine producer

Lubricate places: Use multipurpose grease without acid.

Stick area: Use stick graphite grease.

Device for central lubricate: Use only grease NLGL-class 0 to 2. See dokumentation for central lubricating.

Maintenance

5.0 Searching Mistakes:

Mistake	Cause	Solution
Transmission is not switched on „Pumping-position".	Turn off ignition:	Turn on ignition.
	Clutch is not in motion:	Move clutch .
	Pressure at device for vehicle compricated air is too low:	Turn on the engine until enough pressure is made.
	Pneumatic valve iced	Silencer at pneumatic valve deice.
	Solenoid at pneumatic valve is defective:	Check solenoids and wiring. Valve can be moved also with screwdriver.
	Burned fuse at the vehicle:	Check cause and exchange safety device.
Managing without display: (green LED at stand, display and emergency light)	Turn off ignition:	Turn off ignition.
	Transmission in drivers position:	Direct transmission.
	Defective final switcher of transmission:	Exchange final switcher. (emergency help: both contacts bridge over at plug)
	Main switcher (batery) or fuse F1/F2 burned:	Exchange fuse.
Emergency-Stop indicator blinks, indicator at display:	Move emergency stop:	Unlock emergency stop and start with sirene .
	Turned on electoral switcher at distant command:	Unlock emergency stop, or direct electoral switcher at stand, and start with sirene.
	Cable breaking or defective emergency stop switcher:	Remove mistake with qualified person.
Pumping, sucking not starts: (no pressure)	Electoral switcher at stand:	Electoral switcher at distant command and start command through sirene.
	Safety grate is open:	Close safety grate.
	„Turn on pump" at start command with sirene:	Turn off the pump and restart it.
	Transmissions'vehicle is not put in, engine is not working:	Put in pace, start engine.
	Potenciometer for number of paces „0":	Adapt biger value.

	Move emergency stop:	Unlock emergency stop and start moving with sirene.
	Hydraulic oil is too hot:	Cool hydraulic device.
	No pressure in storage:	Check valve solenoid storage burden, as supply pipe and safety device in command closet. (For finishing it's possible to mechanicly close storage burden valve. Attention! Closing makes all safety functions out of order.)
	Without feeding pressure:	Suck filter and feeding pressure filter has to be checked and exchange if needed.
	Pressure regulation valve is defective:	Exchange pressure regulation valve. (For finishing command pump with needle-shaped valve. Attention! By that potenciometer for number of paces is out of order.)
	Direct valve is defective:	Check solenoids and exchange if need it.
Pumping, sucking is not starting: (maximum pressure)	Plug in conveyor pipe line:	Reccurent sucking and eliminate cause of blockage.
	Sensor mistake of drive cylinder:	Check sensors and turn off defective sensor. As soon as possible exchange defective sensor.
	Sucking valve looking:	Unlock.
	Sensor is not turning on final position:	Test cylinder switcher A – B lead out drive cylinder into final position and start pump.
Pump is throwing out litlle bit of concrete, in unequal intervals:	Adapted wrong or grade of vehicle transmission:	Adapt suitable pace.
	Number of vehicle turnings is too low:	Increase number of turnings. Check adaptation.
	Concrete pumps are sucking air:	Auto mixer driver direct that hooper must always be filled by minimum till mixers' axis. Check wearness of conveying pistons.
	Concrete structure unfit for pumping:	Concrete suitable for pumping is using.
	Valve adapting pressure regulation or potenciometer has changed:	Check adaptation. (possible against data list)

Maintenance

	Storage pressure too low:	Fill the storage.
	Feeding pressure too low:	Sucking filter and feeding pressure filter check and exchange if needs.
	S-tube hardly going:	Adaptations at S-tube, check wearing plate and ring at big wearness or breakage and S-tube subsidence.
Short pace concrete pump:	Long breaks at power engine:	Remove short pace by moving the test cylinder A/B.
	One power sensor at drive cylinder is defective:	Exchange sensor.
	Pistons ring at drive cylinder wearing:	Exchange pistons rings.
Supporter can not be lead out:	Wrong switcher position:	Electoral switcher in stand position or distant command at supporter.
	Supporters' switcher is not moving:	Move switcher.
	None vehicle transmission pace is not reserved, engine is not working:	Reserve pace, start the engine.
	Previous selection valve is not moving:	Check solenoid and wiring. Supporters' previous selection valve move with hand.
	Pressure adaption on supporters' valve too low:	Check pressure adaption to a list or adapt later on. Clean limit pressure valve.
	Blockade is not opening:	Lubricate blockade. (if needs, clean and dismantle, change seals, clean the edge)
Supporter is moving independently:	Dirty reccurent valve for blockade:	Clean and exchange reccurent valve.
	Cylinder seal wearing:	Change seal.
	Bend cylinder with too much pressure:	Change cylinder.
Distributor is not moving:	Switcher wrong position:	Electoral switcher in position boom at distant command and place distant serving.
	Any pace is not reserved vehicle transmission, engine is not wrong:	Put in pace, start engine.
	Emergency stop moved:	Emergency stop and start with command through sirene.

	Distant radio command is not working:	Batery (fillness) check at giver. Distant radio command start with command through sirene. Work forward through cable distant command.
	Electoral valve is not moving:	Check solenoid and wiring. (Boom electoral valve move with hand)
	Not enough hydraulic oil:	Stop and fill engine with oil at once. Attention: Air must be let out from cylinder boom.
	Dirtyness in hydraulic system:	Exchange filter and confide cleaning of complete system to qualified person.
	Jet in Load sensing line closed: (from 42m distributor)	Clean the jet.
Distributor is moving slowly:	Switcher 50/100% stand at 50%:	Place switcher at 100%.
	Adaption valve values are not suitable:	Check adaption. (through telephone)
	Put in wrong pace or transmission vehicle grade:	Put in right pace.
	Pressure adaption at command boom command block too low:	Check pressure adaption to list, or adap later on. Clean limit pressure valve.
	Defective hydraulic pump:	Exchange hydraulic pump.
Some of distributor movings are not functioning:	Solenoids at command block disributor are defective:	Check or exchange solenoid and wiring.
A: Arm1 is not dropping:	Sensor at distributor stand is activated:	Exchange sensor.
B: Turning is not working:	Distributor is at final swing:	Drive it in opposite direction.
	Support safety control turned off turning:	Turn in safe area.
	Final switcher „Turning" or solenoid at command block boom defective: (from 42m distributor)	Final switcher or solenoid change.
Distributor is moving, although none element is not moved:	Weight maintenance of valve dirtyness:	Qualified person has to clean valves for weight maintenance. Adaption pressure adapt to list. If needs change valves.

Maintenance

	Cylinder seal of boom wearing:	Change seal.
	Boom cylinder deformed by overpressure:	Exchange distributor cylinder.
„Turning" is too slow, or stays standing:	Adapt pressure too low:	Check adapt pressure to list or adapt later on. Clean valve for pressure limit.
	Machine position too obliqued:	Reduced obliqued position.
	Not enough lubricated rotating ball conection:	Lubricate rotating ball conection.
	Worn-out engine turn mechanism:	Exchange turn mechanism engine.
Distributor is rotating, although rotating is not moved:	Worn-out brake of turn mechanism:	Exchange break panelling.
Mixer is moving:	Opened safety grate:	Close safety grate.
	Water pump is working:	Turn off water pump.
	Too hard concrete or not connected in hooper:	Clear out and clean hooper.
	Pressure adapting at command block mixer is too low:	Check pressure adaption to list or adapt later on. Clean limit pressure valve.
	Defective solenoid:	Solenoid and wiring check or exchange.
Water pump is not working:	Water tank is empty:	Fill with water.
	Mixer turned on:	Turn off mixer.
	Pressure adaption at command block mixer is too low:	Check pressure adaption to list or adapt later on. Clean limit pressure valve.
	Defective solenoid:	Solenoid and wiring check or change.
	Dirtyness in water pump:	Separate and clean water pump.
	Axial play of pump move:	Release clutch and axial play adapt in the middle.
Lubricating device is not working:	Burned fuse:	Exchange fuse.
	Pump not „Turn on":	Turn on pump.
	Grease too consistency:	Exchange with suitable grease.
	Lubricated place blocked:	Release lubricating blocked place.

	Blocked lubricating divider: Defective pump element:	Exchange grease from divider lubricating to divider lubricating. Exchange pump element.
Mistake at „Support safety" function:	Blockade is not pull in: Defective sensors: Angle sensors are adapted incorrectly:	Completely pull in blockade, until sensor activates. Exchange sensor. Check adaption. (through telephone possible)

Übersicht B 00 - B 09

over view B 00 - B 09

Waitzinger
Baumaschinen GmbH

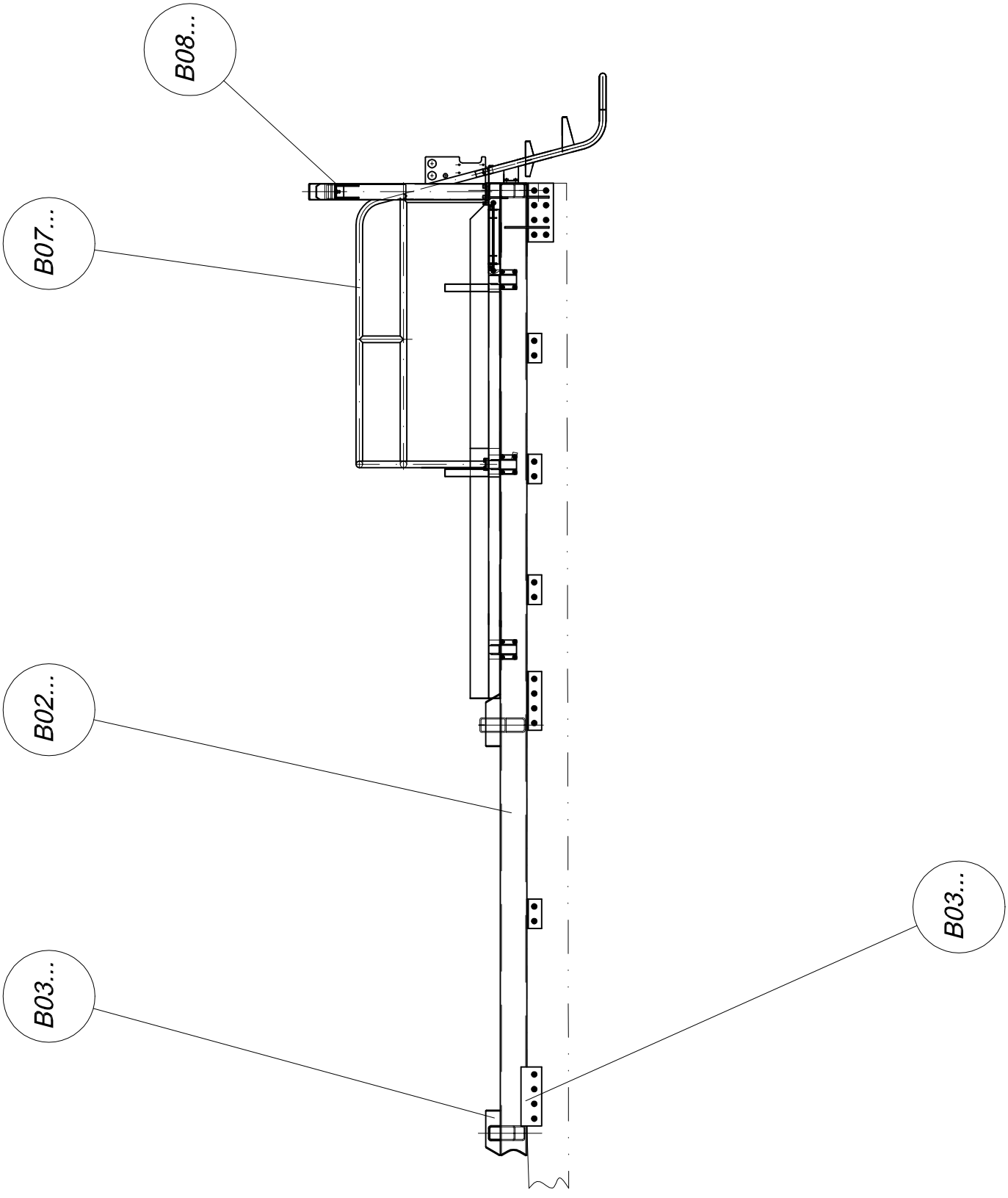

22.07.2002

Mastbockverbindung kpl.

connection for boom cpl.

B 03 2 051a

Waitzinger
Baumaschinen GmbH

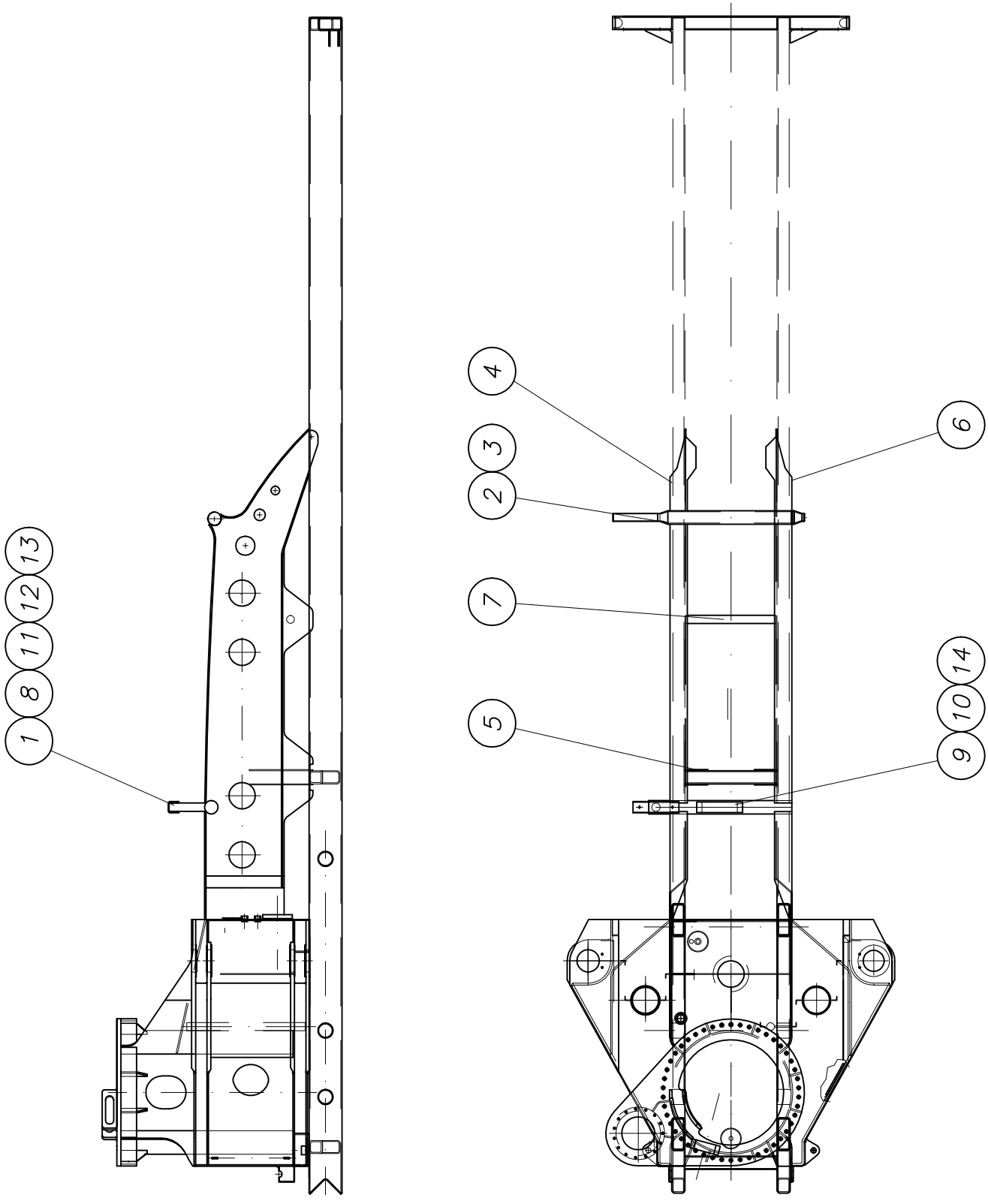

PARTS LIST

06.03.06 09:02:13

part list	description	created	index	valid from	valid to
B032051	connection for boom 42xxt	03.08.04 HF	a	07.07.05	

pos	description stock	ident-no dimensions	DIN material	index	weigth Kg	quantity unit
1	boom support section4 own parts list	B032032		a 09.09.04	5,00	1,00 Stk
2	pipe (welding group) own parts list	B033161			20,00	1,00 Stk
3	pipe	B039042 Rohr 60.3x4x336	2448 S355J2G3		2,00	1,00 Stk
4	connection for boom own parts list	B032040			174,00	1,00 Stk
5	rib	B039036 Bl 10x172x435	1543 S355J2G3		3,08	4,00 Stk
6	connection for boom own parts list	B032035			174,00	1,00 Stk
7	pipe	B032031 4xd60,3x683	2448 S355J2G3		3,80	1,00 Stk
8	plate	B084239 30x85x350	Polyamid			1,00 Stk
9	plate	B084237 Bl 25x80x350	1543/EN10029 S355J2G3		5,50	1,00 Stk
10	plate	B084238 12x80x350	Polyamid			1,00 Stk
11	zylinder head screw M10 x 30	WAI103826				2,00 Stk
12	spring washer A10	WAI103079			0,00	2,00 Stk
13	hex. nut M10 DIN985 8.	WAI102125			0,01	2,00 Stk
14	sunk screw M 12 x 25	WAI107333				2,00 Stk

Übersicht B 10 - B 29

over view B 10 - B 29

Waitzinger
Baumaschinen GmbH

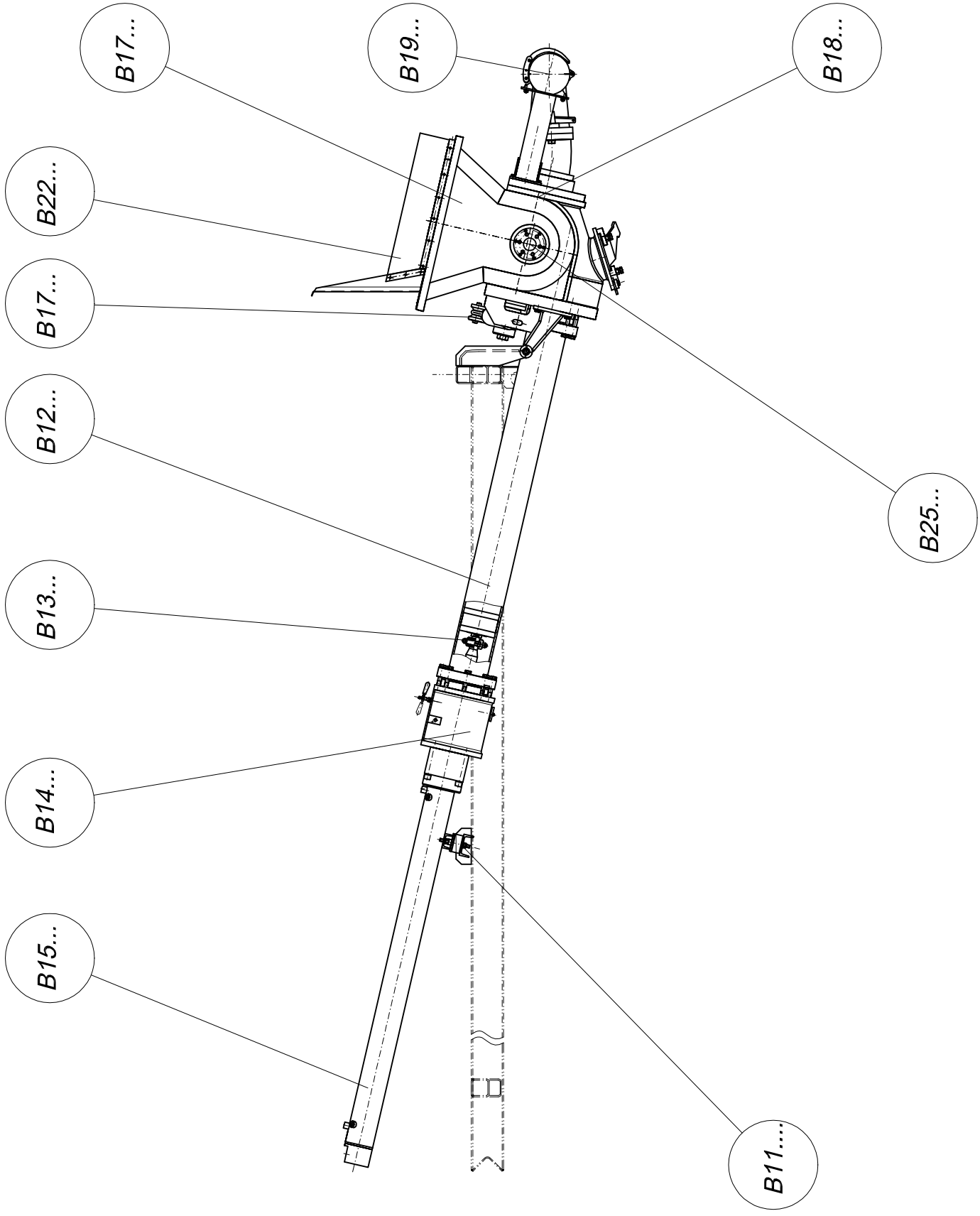

22.07.2002

Pumpenlagerung kpl.

pump support cpl.

B 11 5 005

Waitzinger
Baumaschinen GmbH

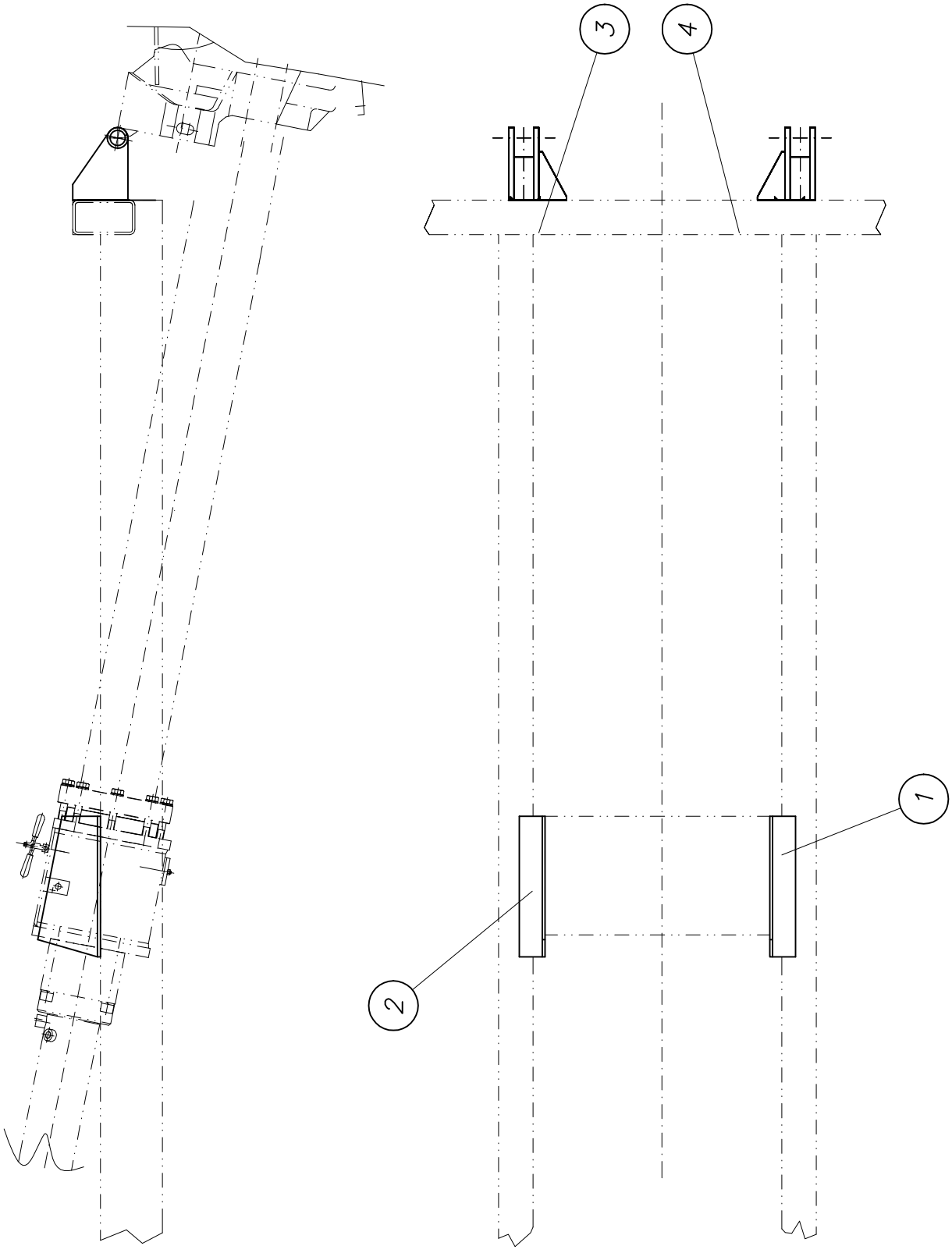

PARTS LIST

28.09.05 09:40:19

part list	description	created	index	valid from	valid to
B115005	pump support funnel	22.01.04 HF			

pos	description stock	ident-no dimensions	DIN material	index	weigth Kg	quantity unit
1	holder for water box left	B114166 Bl 8x237x407	1543/EN10029 St37-2		5,00	1,00 Stk
2	holder for water box right	B114167 Bl 8x237x407	1543/EN10029 St37-2		5,00	1,00 Stk
3	bracket right cpl. -N own parts list	B113024		a 20.02.04	6,60	1,00 Stk
4	bracket left cpl. -N own parts list	B113025		a 20.02.04	6,60	1,00 Stk

Förderzylinder kpl.

conveying cylinder cpl.

B 12 5 010

Waitzinger
Baumaschinen GmbH

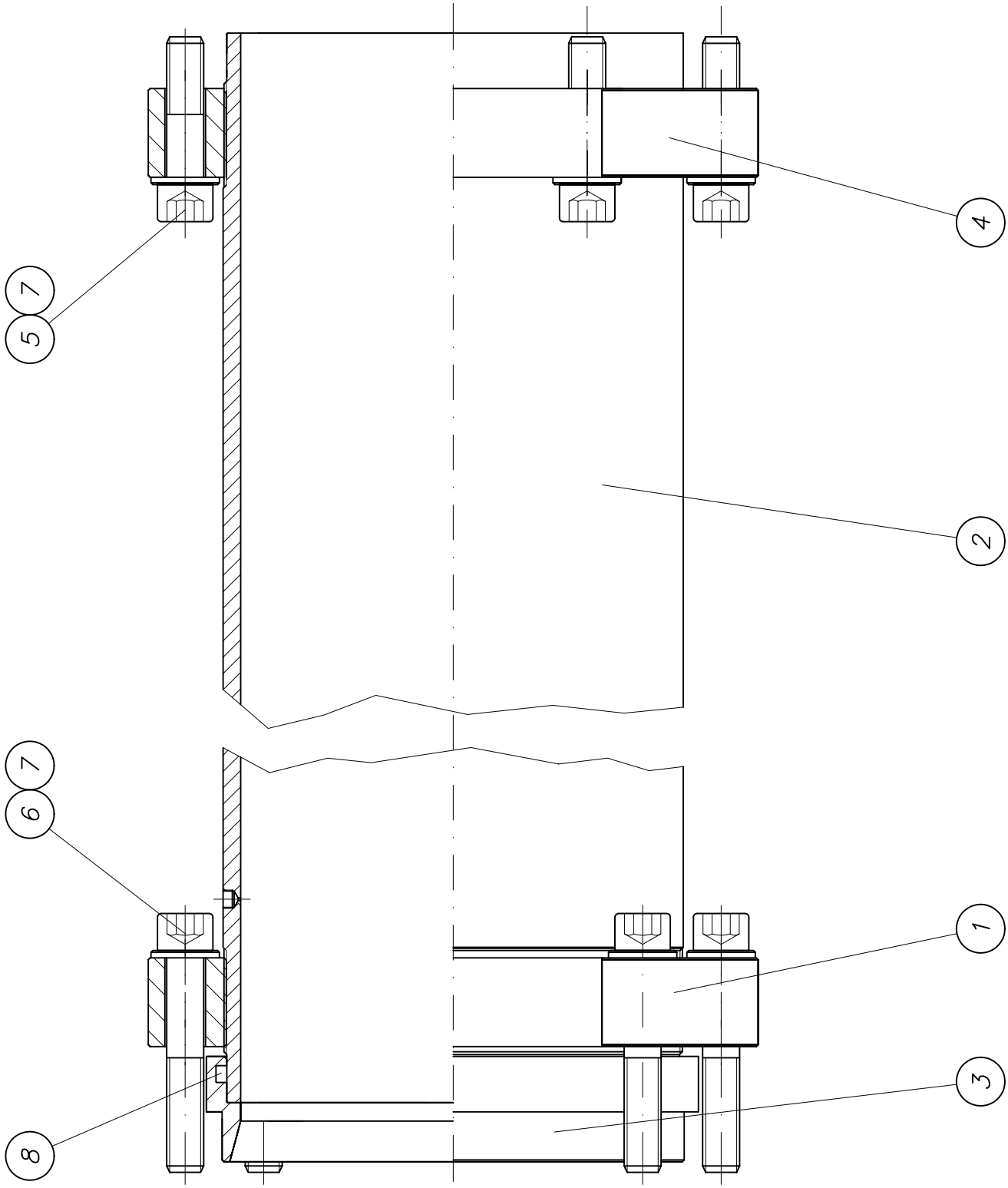

PARTS LIST

27.06.05 08:45:52

part list	description	created	index	valid from	valid to
B125010	conveyor cylinder cpl. DN230/215x2000 w.	15.03.01 Mi			

pos	description stock	ident-no dimensions	DIN material	index	weigth Kg	quantity unit
1	flange ring DN 230 threaded	B124021 Bl 55xd330	1543/EN10029 St52-3		12,20	2,00 Stk
2	conveyor cylinder DN230x2000 chromized	B124019 Rohr 250x12.5x2	2448 St52.0		150,00	2,00 Stk
3	fitting ring DN 230 water box	B123012 Rohr 267x36x65	2448 St52.0		6,00	2,00 Stk
4	flange ring DN 230 threaded	B125014 Bl 55xd330	1543/EN10029 St52-3		12,20	2,00 Stk
5	cheese head screw M20 x 80	WAI106754				12,00 Stk
6	cheese head screw M20 x 120	WAI103970				14,00 Stk
7	washer HV	WAI100691			0,01	26,00 Stk
8	O-ring 244 x 7, NBR70	WAI102868				4,00 Stk

Förderkolben kpl.

conveying piston cpl.

B 13 3 020

Waitzinger
Baumaschinen GmbH

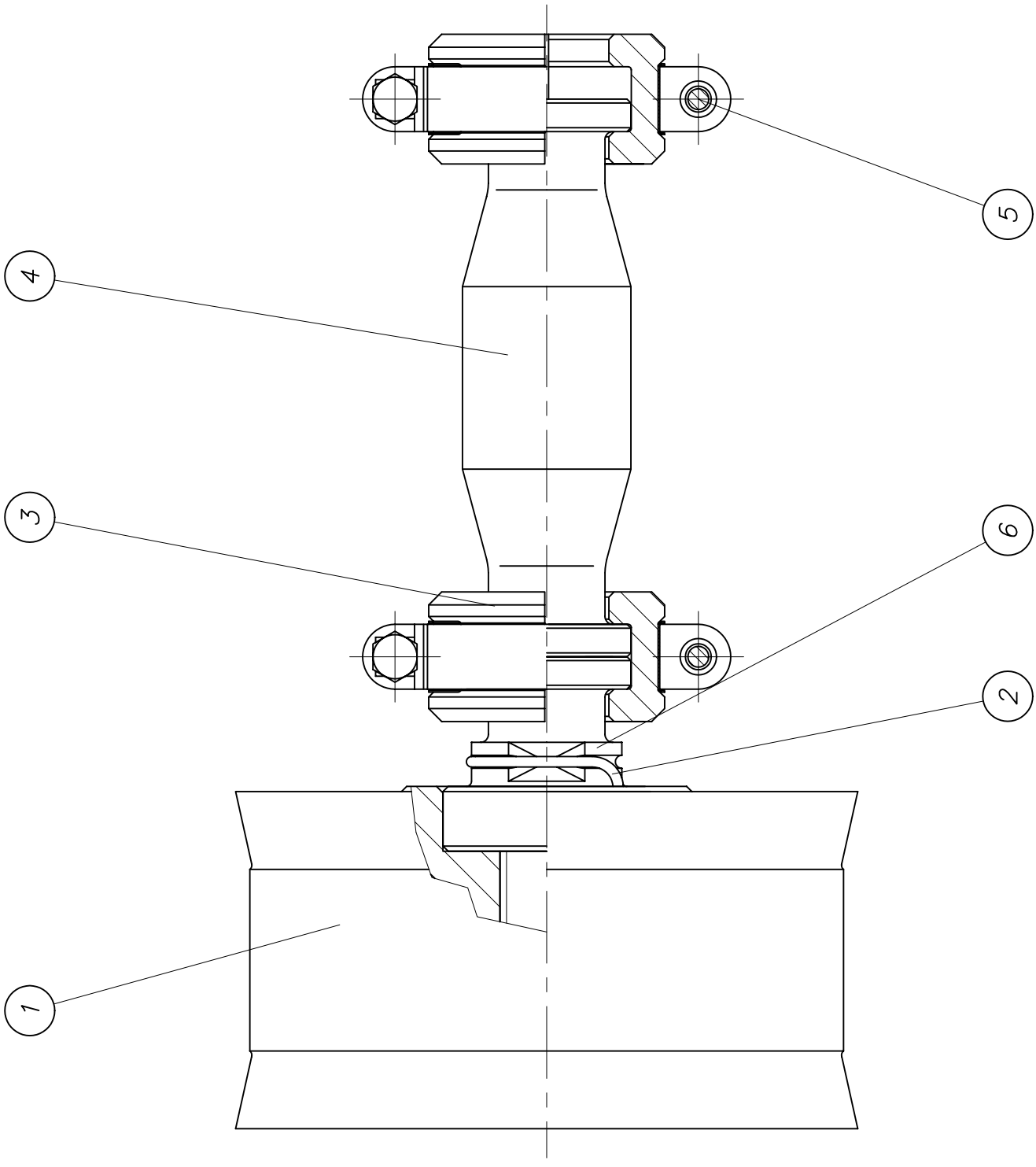

15.03.2001

PARTS LIST

27.06.05 08:46:17

part list	description	created	index	valid from	valid to
B133020	piston ram cpl. DN 230	08.07.98 Mi			

pos	description stock	ident-no dimensions	DIN material	index	weigth Kg	quantity unit
1	piston ram DN 230	WAI100175			19,90	2,00 Stk
2	protection ring	B133019 Federst. 4	17223			2,00 Stk
3	clamp coupling	B131004 Rd 95x50	1013 42CrMo4V			4,00 Stk
4	distance piece	B133003 Rd 70x225	1013 42CrMo4V			2,00 Stk
5	hose clamp S86/25	WAI101381			0,22	4,00 Stk
6	coupling bolt	B133018 Rd 82x120	1013 42CrMo4V		2,20	2,00 Stk

Spülkasten kpl.

water box cpl.

B 14 3 000

Waitzinger
Baumaschinen GmbH

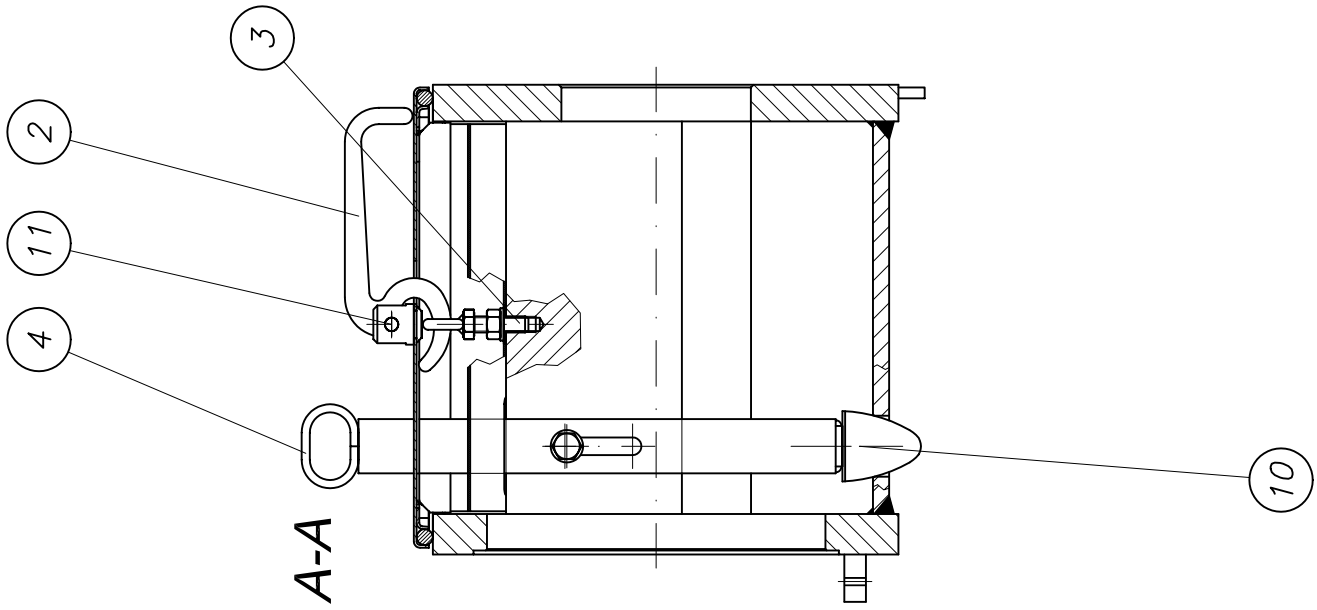

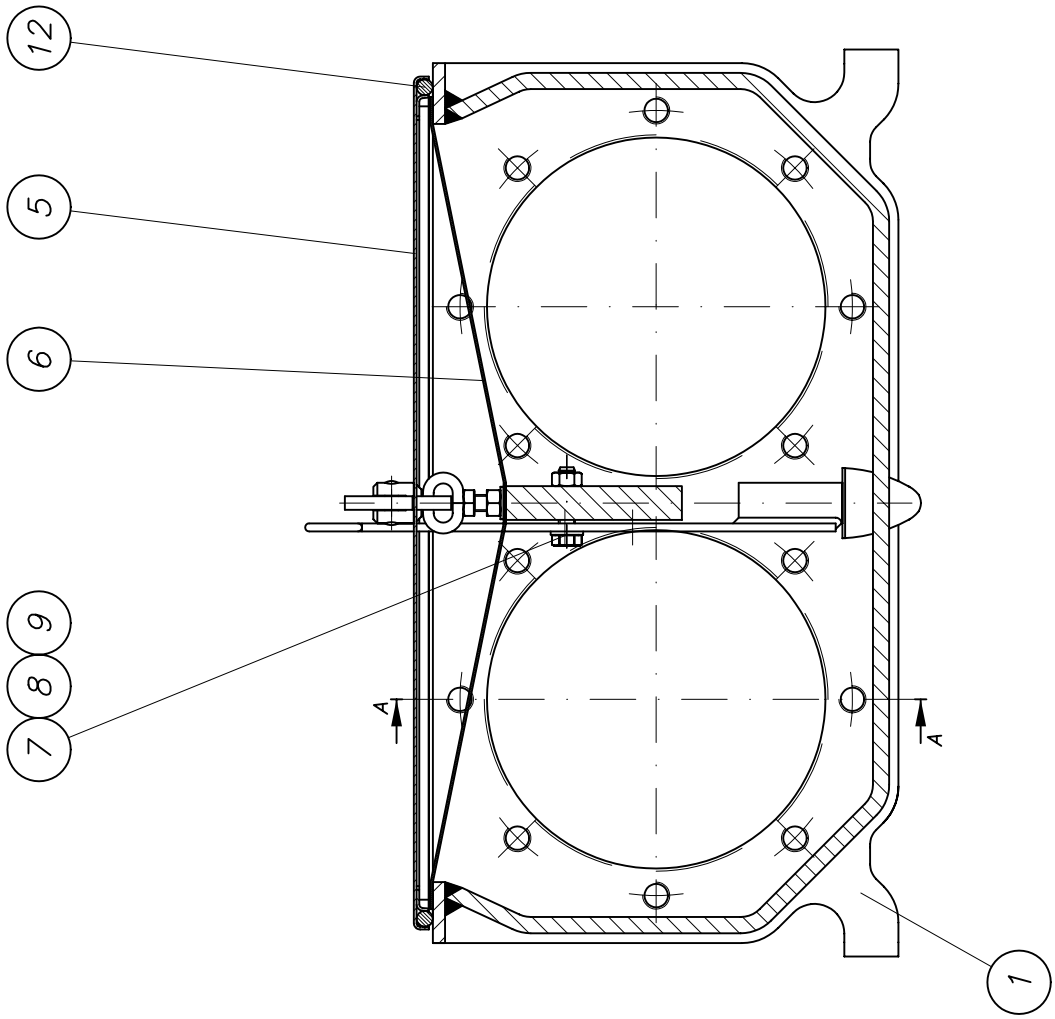

PARTS LIST

27.06.05 08:46:41

part list	description	created	index	valid from	valid to
B143000	waterbox cpl. DN 200/230 plug	19.06.97 HG			

pos	description stock	ident-no dimensions	DIN material	index	weigth Kg	quantity unit
1	waterbox cpl. DN 200/230 (processing) own parts list	B143001		b 02.05.00		1,00 Stk
2	lever	B143007 Bl 10x195x78.5	1543/EN10029 St52-3			1,00 Stk
3	loop bolt cpl. own parts list	B143009			0,09	1,00 Stk
4	drain pin own parts list	B143011			1,14	1,00 Stk
5	cover for waterbox cpl. own parts list	B143015			4,55	1,00 Stk
6	savety lattice	B143020 Lochbl. 1.5x610	Rostfrei	a 28.05.03		1,00 Stk
7	hex. screw M12	WAI103688				1,00 Stk
8	nut M12 DIN 934	WAI101557			0,02	2,00 Stk
9	washer	WAI100504				2,00 Stk
10	rubber buffer 50 x 58	WAI102712				1,00 Stk
11	pin	WAI103387				1,00 Stk
12	O-ring cord 12mm	WAI101831				1,95 Mtr

Antriebszylinder kpl.

drive cylinder cpl.

B 15 4 031

Waitzinger
Baumaschinen GmbH

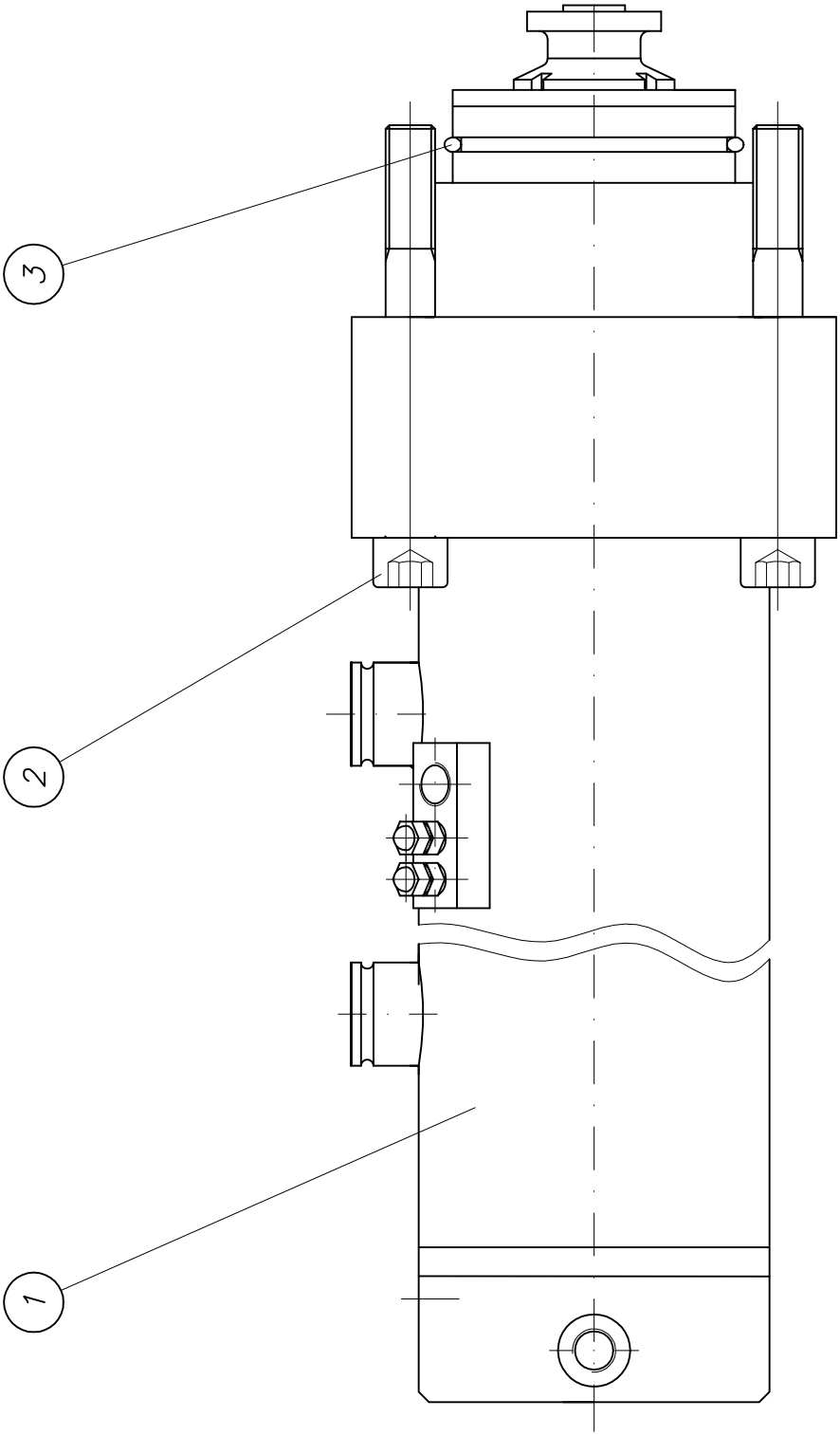

PARTS LIST

27.06.05 08:26:11

part list	description	created	index	valid from	valid to
B154031	drive cylinder cpl. 140/80-2000	20.09.00 Mi			

pos	description stock	ident-no dimensions	DIN material	index	weigth Kg	quantity unit
1	drive cylinder 140/80-2000 REED own parts list	WAI106154		a 30.10.03	295,00	2,00 Stk
2	cylinder head screw M 24 x 200	WAI103828				8,00 Stk
3	O-ring 129,2 x 5,7	WAI101441				2,00 Stk

Antriebszylinder

drive cylinder

WAI 106154a

Waitzinger
Baumaschinen GmbH

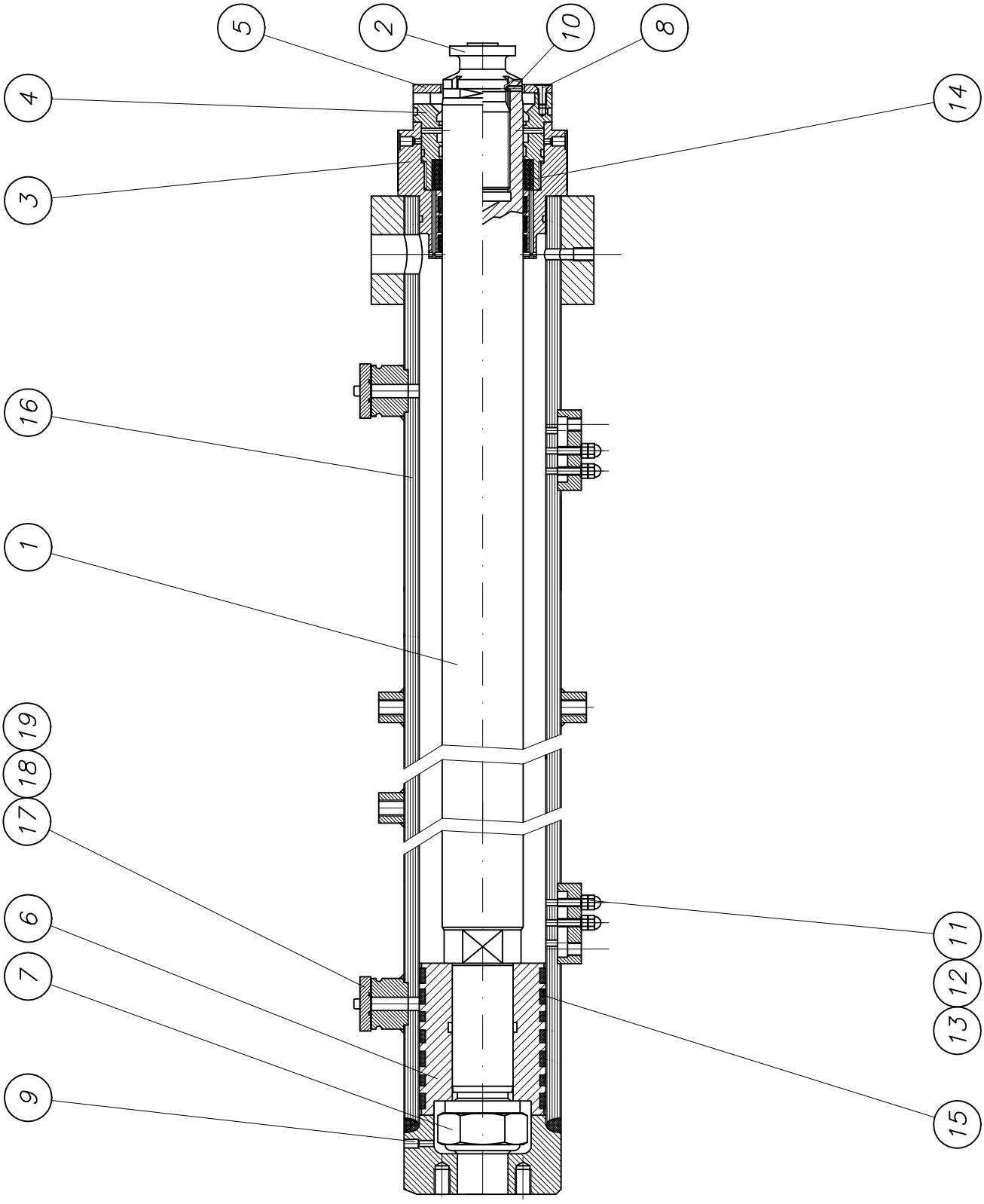

01.12.2003

PARTS LIST

27.06.05 08:28:07

part list	description	created	index	valid from	valid to
WAI106154	drive cylinder 140/80-2000 REED	15.05.00 Mi	a	30.10.03	

pos	description stock	ident-no dimensions	DIN material	index	weigth Kg	quantity unit
1	piston rod for drive cylinder	WAI105724 Rd 90x2173	1013 Ck45			1,00 Stk
2	piston joint	WAI104146 Rd 80x131	1013 42CrMo4V		1,87	1,00 Stk
3	guide piece for drive cylinder 140	WAI105725 Rd 180x142	1013 St52	a 30.07.03		1,00 Stk
4	sealing carrier for drive cylinder	WAI104890	GGG 40	a 29.07.03		1,00 Stk
5	aperture for drive cylinder	WAI105726 8x d137	Polyamid			1,00 Stk
6	piston 140 REED	WAI106305		b 30.07.03		1,00 Stk
7	piston nut for drive cylinder	WAI105728				1,00 Stk
8	sunk screw M 8 x 20	WAI103397				3,00 Stk
9	locking screw G 1/8	WAI100528				3,00 Stk
10	set screw	WAI105739				1,00 Stk
11	hex. nut M8 DIN 934 8. VERZ.	WAI102880				4,00 Stk
12	cap nut M8	WAI104933				4,00 Stk
13	set screw	WAI105740				4,00 Stk
14	sealing set for drive cylinder 125/80 own parts list	WAI104690				1,00 Stk
15	sealing set for drive cylinder 140/80 own parts list	WAI106156				1,00 Stk
16	cylinder pipe cpl. 140 REED	WAI106153		a 30.07.03		1,00 Stk
17	cover for sensor connection	B154017 Rd 11x55	1013 S235J2G3		0,20	2,00 Stk
18	o-ring	WAI108533				2,00 Stk
19	alien bolt M 6x25	WAI103673				4,00 Stk

Stangendichtsatz
rod sealing set

WAI 104690

Waitzinger
Baumaschinen GmbH

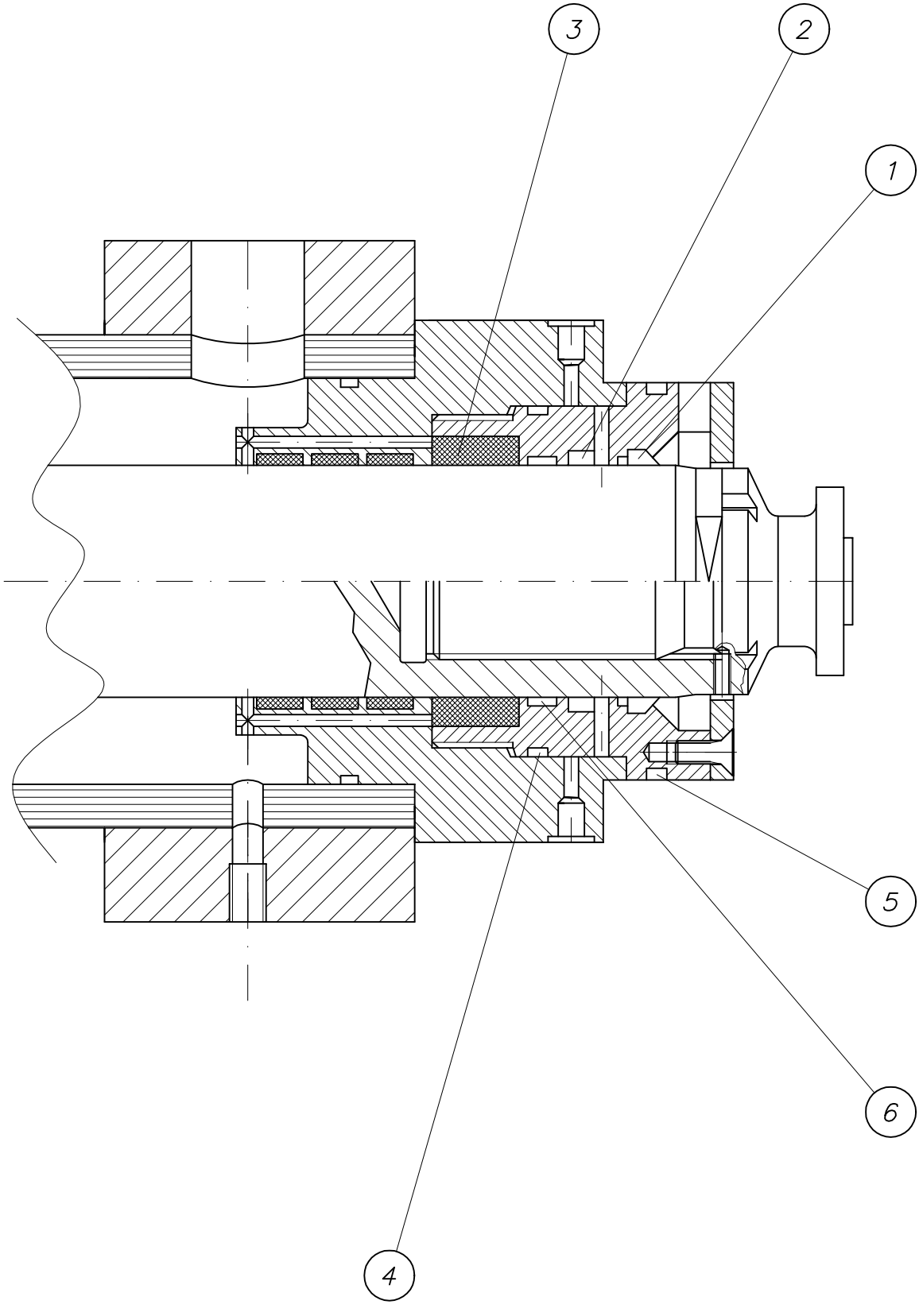

15.03.2001

PARTS LIST

27.06.05 08:29:29

part list	description	created	index	valid from	valid to
WAI104690	sealing set for drive cylinder 125/80	30.08.99 Mi			

pos	description stock	ident-no dimensions	DIN material	index	weigth Kg	quantity unit
1	wiper	WAI100259			0,00	1,00 Stk
2	wiper	WAI105729				1,00 Stk
3	v-packing 80 x 100 x 30	WAI102584				1,00 Stk
4	sealing for drive cylinder	WAI105732				1,00 Stk
5	o-ring	WAI105731				1,00 Stk
6	rod support for drive cylinder	WAI105738				1,00 Stk

Dichtsatz für Antriebszylinder
sealing set for drive cylinder

WAI 106156

Waitzinger
Baumaschinen GmbH

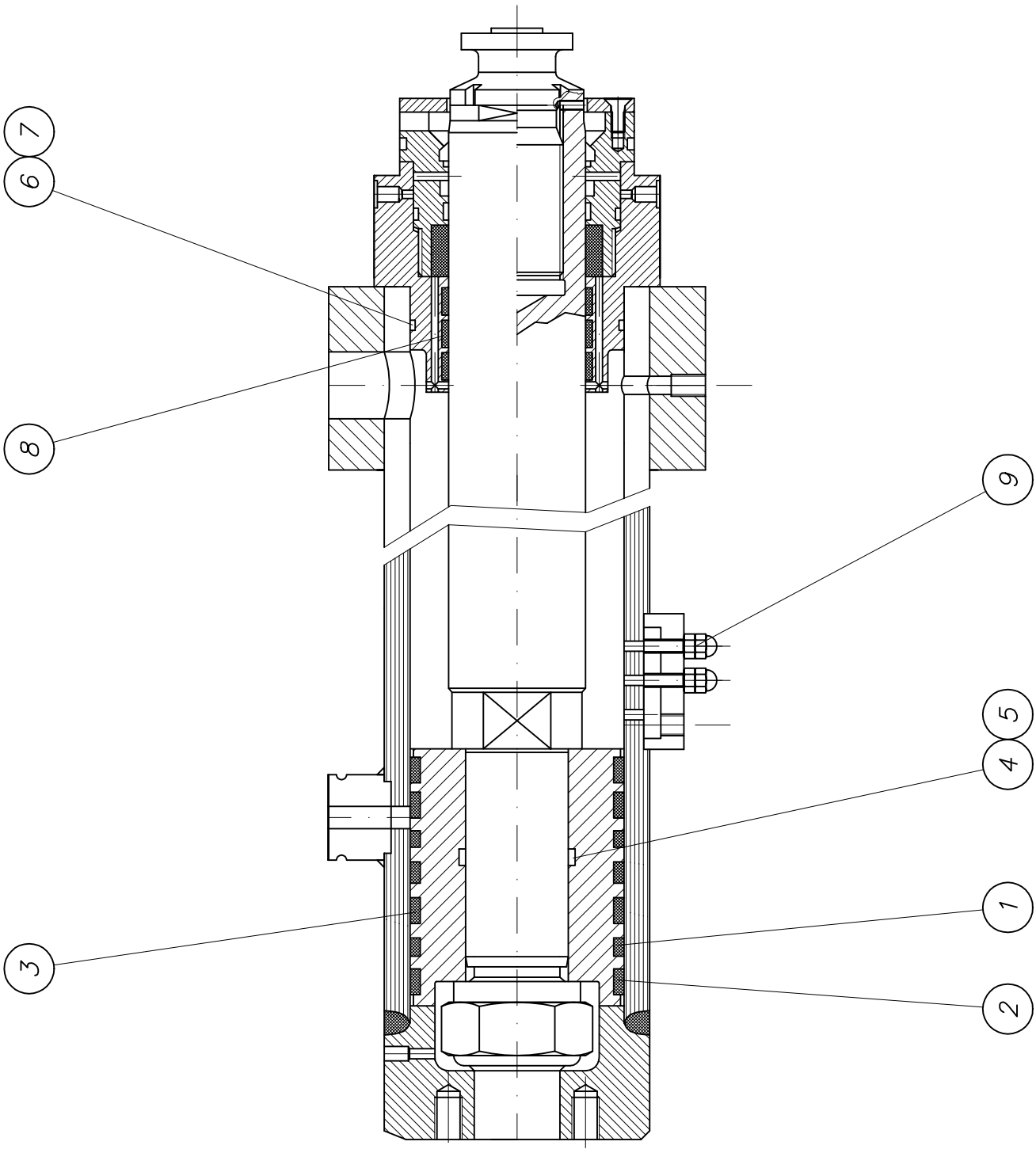

12.11.2002

PARTS LIST

27.06.05 08:31:02

part list	description	created	index	valid from	valid to
WAI106156	sealing set for drive cylinder 140/80	03.08.00 hbk			

pos	description stock	ident-no dimensions	DIN material	index	weigth Kg	quantity unit
1	piston guide	WAI105735				3,00 Stk
2	piston ring permasel DN140	WAI105049			0,05	2,00 Stk
3	piston ring DN 140	WAI106313				2,00 Stk
4	back-up ring	WAI105736				2,00 Stk
5	o-ring	WAI105734				1,00 Stk
6	O-ring 134 x 4	WAI106314				1,00 Stk
7	back-up ring	WAI106315				1,00 Stk
8	piston guide	WAI106316			5,00	3,00 Stk
9	usit-ring 8.7-14-1	WAI101269				8,00 Stk

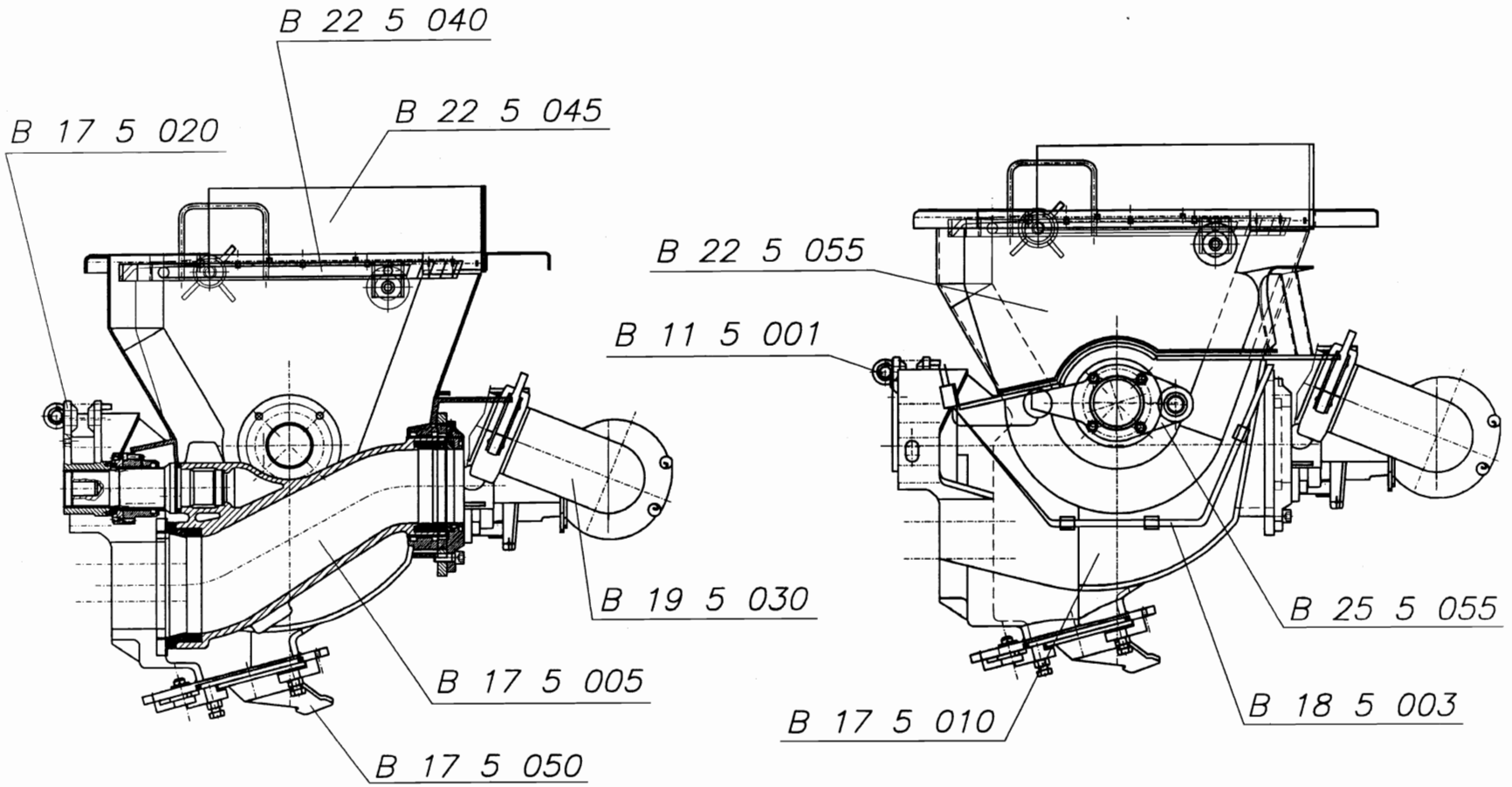

Ohne unsere Genehmigung darf diese Zeichnung weder vervielfältigt noch dritten Personen oder Konkurrenzfirmen mitgeteilt werden.(Paragraph 1 Nr.3 des Urheberrechtsgesetzes vom 14.06.1901)

Zust.	Änderung	Datum	Name

Waitzinger Baumaschinen Vertrieb und Service GmbH

Freimaßtoleranz DIN 7168 mittel

	Datum	Name
Bearb.	22.10.2003	Name
Gepr.		
Norm		

Änderung nur auf CAD

Ursprung | Ers. für | Ers. durch

Maßstab 1:10 | Gewicht 00 N

eigene Stückliste

Schiebersystem kpl. DN 230 Fahrzeug

B 17 5 100

Blatt / Bl.

pos	description	ident-no	DIN	change-index	chg. dat	weight	quant
	stock	dimensions	material	valid from	val.unt.		unit
1	s-valve housing cpl. (processing) DN 230	B175010		b	02.07.03	572.000	1.00
	own parts list						Stk
2	s-valve system complete	B175005		a	25.09.03	0.000	1.00
	own parts list						Stk
3	cleaning hole assembly	B175050		a	21.03.03	0.000	1.00
	own parts list						Stk
4	shift drive system cpl.	B175020				0.000	1.00
	own parts list						Stk
5	pump support funnel	B115001				0.000	1.00
	own parts list						Stk
6	lubrication system complete	B185003				0.000	1.00
	own parts list						Stk
7	conveying pipe line 6"	B195030				0.000	1.00
	own parts list						Stk
8	agitator with drive	B255055		a	17.09.03	0.000	1.00
	own parts list						Stk
9	hopper upper part	B225055				0.000	1.00
	own parts list						Stk

description	drawing-no	ID	date	chg.-index	chg-date	val.from	val.unti
s-valve system cpl.	B175100	ek	13.10.03				

pos	description	ident-no	DIN	change-index	chg. dat	weight	quant
	stock	dimensions	material	valid from	val.unt.		unit
10	grid cpl.	B225040		a	02.10.03	0.000	1.00
	own parts list						Stk
11	rubber apron cpl	B225045		a	04.04.03	0.000	1.00
	own parts list						Stk

description	drawing-no	ID	date	chg.-index	chg-date	val.from	val.unti
s-valve system cpl.	B175100	ek	13.10.03				

*** Liste beendet am 19/04/04/08.31 ***

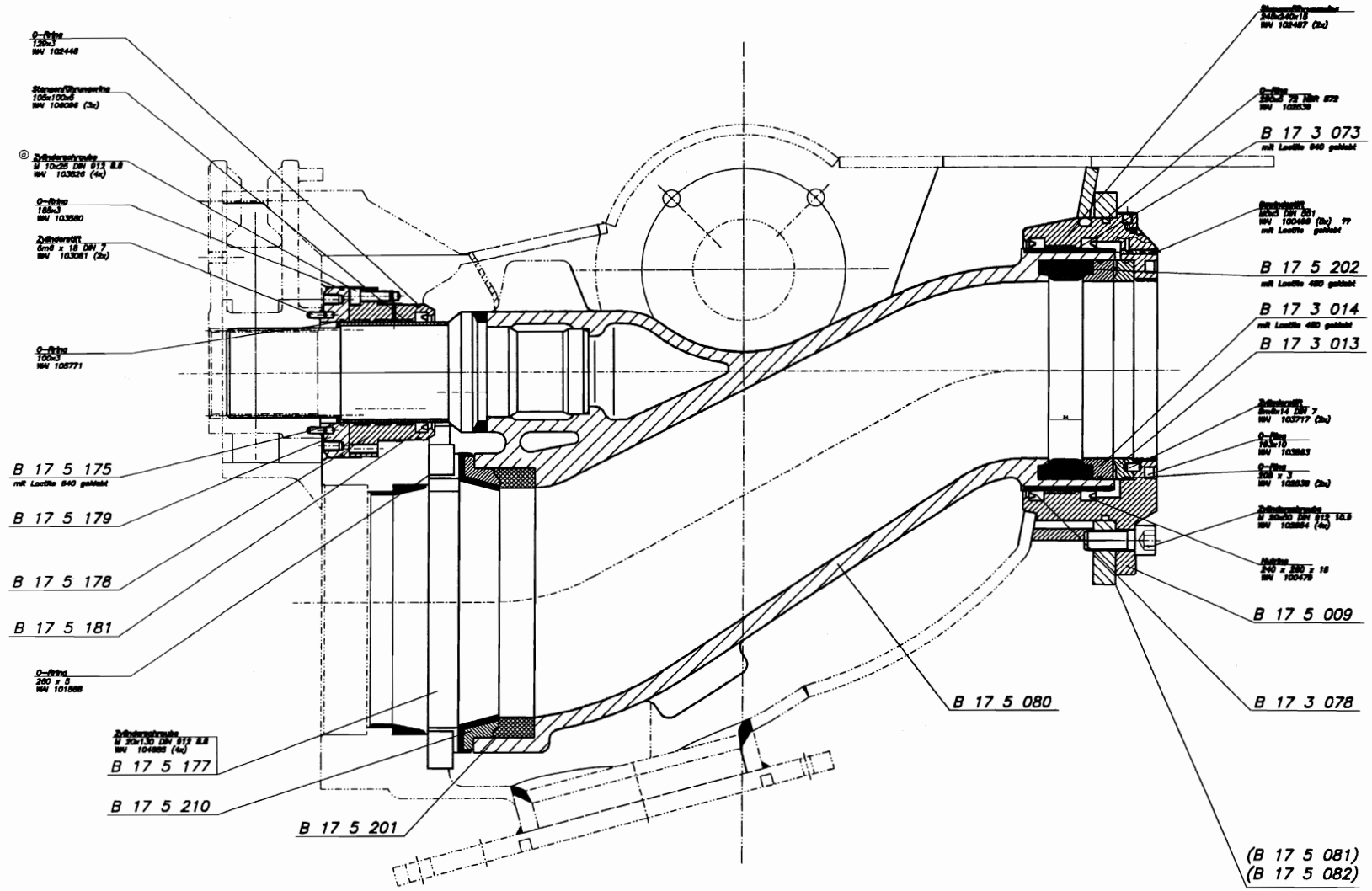

Schieber kpl.

B 17 5 005

pos	description	ident-no	DIN	change-index	chg. dat	weight	quant
	stock	dimensions	material	valid from	val.unt.		unit
1	s-valve cpl.	B175080				98.000	1.00
	own parts list						Stk
2	wear ring DN230	B175210	1543/EN10029			4.000	1.00
		Bl 40xD300	S355J2G3				Stk
3	wear bushing small	B175175	2448			1.700	1.00
		Rohr 108x10x115	StE690				Stk
4	tension ring DN217x64 / 70 shore	B175202	70 Shore			0.000	1.00
		217x64					Stk
5	wear plate DN 250	B175177	1543/EN10029	a	02.12.03	23.000	1.00
		Bl 30x400x644	St52-3				Stk
6	bearing housing small	B175178	1013	a	07.07.03	0.000	1.00
		Rd 180x90	St52-3				Stk
7	axial bearing washer	B175179	1013			0.000	1.00
		Rd 180x35	CuSn8P (2.1830)				Stk
8	groove ring 100x120x12	B175181				0.040	1.00
	own parts list						Stk
10	bearing housing big (processing) megahop	B175009				0.000	1.00
	own parts list						Stk

description	drawing-no	ID	date	chg.-index	chg-date	val.from	val.unti
s-valve system complete	B175005	ek	17.09.03	a	25.09.03		

pos	description	ident-no	DIN	change-index	chg. dat	weight	quant
	stock	dimensions	material	valid from	val.unt.		unit
11	slide ring DN 217 x 20	B173013				0.000	1.00
		d217x20					Stk
12	slide ring DN 217 x 30	B173014				0.000	1.00
							Stk
13	wear bushing big	B173073	2458			2.000	1.00
		Rohr 244.5x12.5x94	StE690				Stk
14	groove ring 240x260x15	B173078				0.040	1.00
	own parts list						Stk
20	rod wear-ring 240 x 245 x 15 mm	WAI102487				0.030	2.00
							Stk
21	rod wear-ring 105 x100 x 15 mm	WAI106096				0.013	3.00
							Stk
22	O-ring 290 x 5	WAI102539				0.022	1.00
							Stk
23	O-ring 193 x 10	WAI103563				0.052	1.00
							Stk
24	O-ring	WAI101808				0.000	2.00
							Stk

description	drawing-no	ID	date	chg.-index	chg-date	val.from	val.unti
s-valve system complete	B175005	ek	17.09.03	a	25.09.03		

pos	description	ident-no	DIN	change-index	chg. dat	weight	quant
	stock	dimensions	material	valid from	val.unt.		unit
25	set screw	WAI100499				0.000	5.00
							Stk
26	straight pin	WAI103717				0.000	2.00
							Stk
27	cheese head screw M20 x 50	WAI102854				0.000	4.00
							Stk
30	O-ring 129,5 x 3 SH90	WAI102448				0.000	1.00
							Stk
31	sealing ring 165 x 3	WAI103580				0.000	1.00
							Stk
32	O-ring	WAI105771				0.000	1.00
							Stk
33	straight pin	WAI103061				0.000	2.00
							Stk
34	cylinder head screw M 10 x 25	WAI106654				0.000	4.00
							Stk
35	groove ring 240x260x15	WAI100479				0.000	1.00
							Stk

description	drawing-no	ID	date	chg.-index	chg-date	val.from	val.unti
s-valve system complete	B175005	ek	17.09.03	a	25.09.03		

pos	description	ident-no	DIN	change-index	chg. dat	weight	quant
	stock	dimensions	material	valid from	val.unt.		unit
36	tension ring	B175201	50 Shore			0.600	1.00
		270x45					Stk
37	cheese head screw M20 x 130	WAI104885				0.000	4.00
							Stk
38	O-ring	WAI101588				0.000	2.00
							Stk

description	drawing-no	ID	date	chg.-index	chg-date	val.from	val.unti
s-valve system complete	B175005	ek	17.09.03	a	25.09.03		

*** Liste beendet am 19/04/04/08.46 ***

Reinigungsklappe kpl.

cleaning cover cpl.

B 17 5 050a

Waitzinger
Baumaschinen GmbH

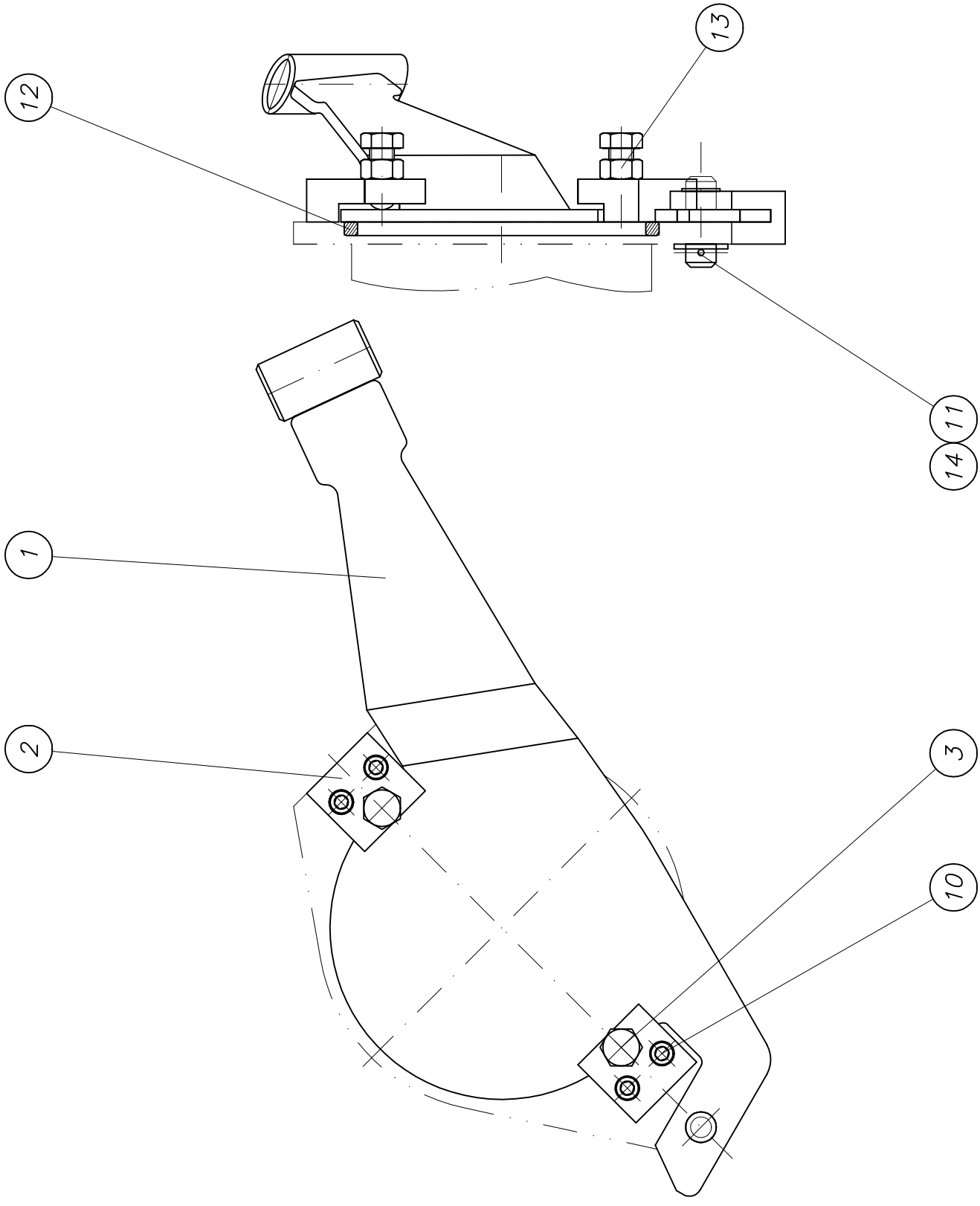

PARTS LIST

22.06.05 10:11:47

part list	description	created	index	valid from	valid to
B175050	cleaning hole assembly	03.03.00 Mi	a	21.03.03	

pos	description stock	ident-no dimensions	DIN material	index	weigth Kg	quantity unit
1	cover cpl. for cleaning cover own parts list	B175051		b 15.06.04	9,00	1,00 Stk
2	plate	B172126 Bl 40x67x70	1543/EN10029 St52-3		0,89	2,00 Stk
3	screw M 20 (processing) own parts list	B172128 6-Kt.Schraube M	933-8.8		0,18	2,00 Stk
10	cheese head screw M 12 x 40	WAI102855				4,00 Stk
11	washer 25, DIN 125	WAI103298				1,00 Stk
12	O-ring cord 12mm	WAI102908				0,78 Mtr
13	nut M20 DIN 934	WAI102891				2,00 Stk
14	split pin	WAI105194				1,00 Stk

Schwenkantrieb kpl.

tilting device cpl.

B 17 5 020b

Waitzinger
Baumaschinen GmbH

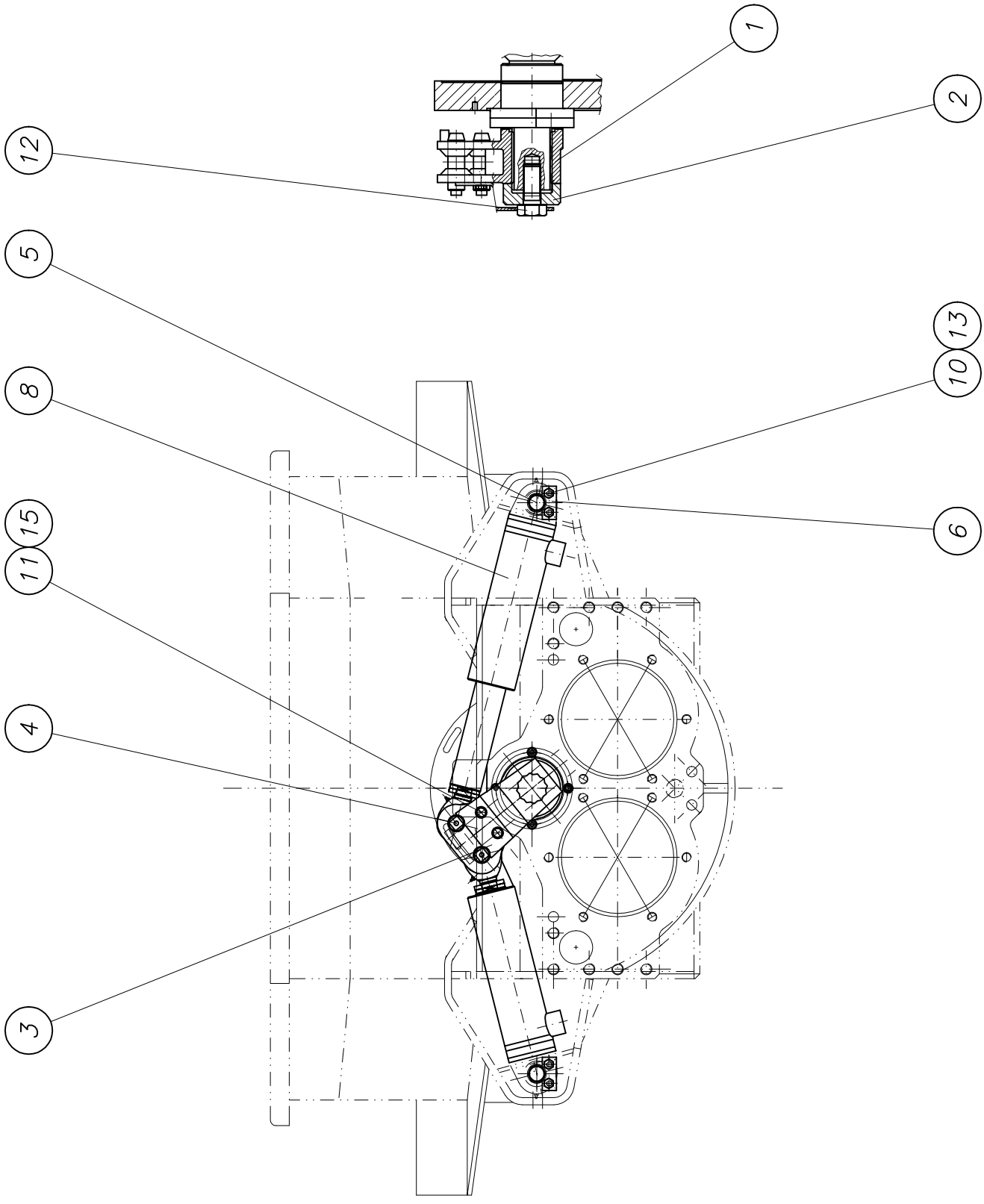

PARTS LIST

25.08.05 09:50:12

part list	description	created	index	valid from	valid to
B175020	shift drive system cpl.	11.07.01 Mi	b	02.08.05	

pos	description stock	ident-no dimensions	DIN material	index	weigth Kg	quantity unit
1	tilting lever (processing) own parts list	B175180			13,00	1,00 Stk
2	pressure disc	B174103 Rd125x50	1013 42CrMo4V		2,70	1,00 Stk
3	locking plate	B174104 Bl 6x220x120	1543/EN10029 St52-3		1,00	1,00 Stk
4	bolt	B173019 Rd 40x125	1013 42CrMo4V		0,83	2,00 Stk
5	bolt	B173066 Rd 40x115	1013 42CrMo4V	a 06.04.00	0,80	2,00 Stk
6	axle retainer	B173067 Fl 30x6x70	1017 St52-3		0,13	2,00 Stk
8	tilting cylinder D 65x220	WAI109491			23,00	2,00 Stk
10	hex. bolt M12 x 25 DIN 933 8.8	WAI101001			0,04	4,00 Stk
11	hex. bolt M12x30 DIN 933 8.8	WAI102107			0,04	2,00 Stk
12	hex.screw M 36 x 3 x 85	WAI103327		a 01.08.05		1,00 Stk
13	conical spring washer 12 mm	WAI102877				4,00 Stk
15	spring washer A12 DIN 127 VERZ.	WAI102896				2,00 Stk

Pumpenlagerung Trichter kpl.

pump support hopper cpl.

B 11 5 001

Waitzinger
Baumaschinen GmbH

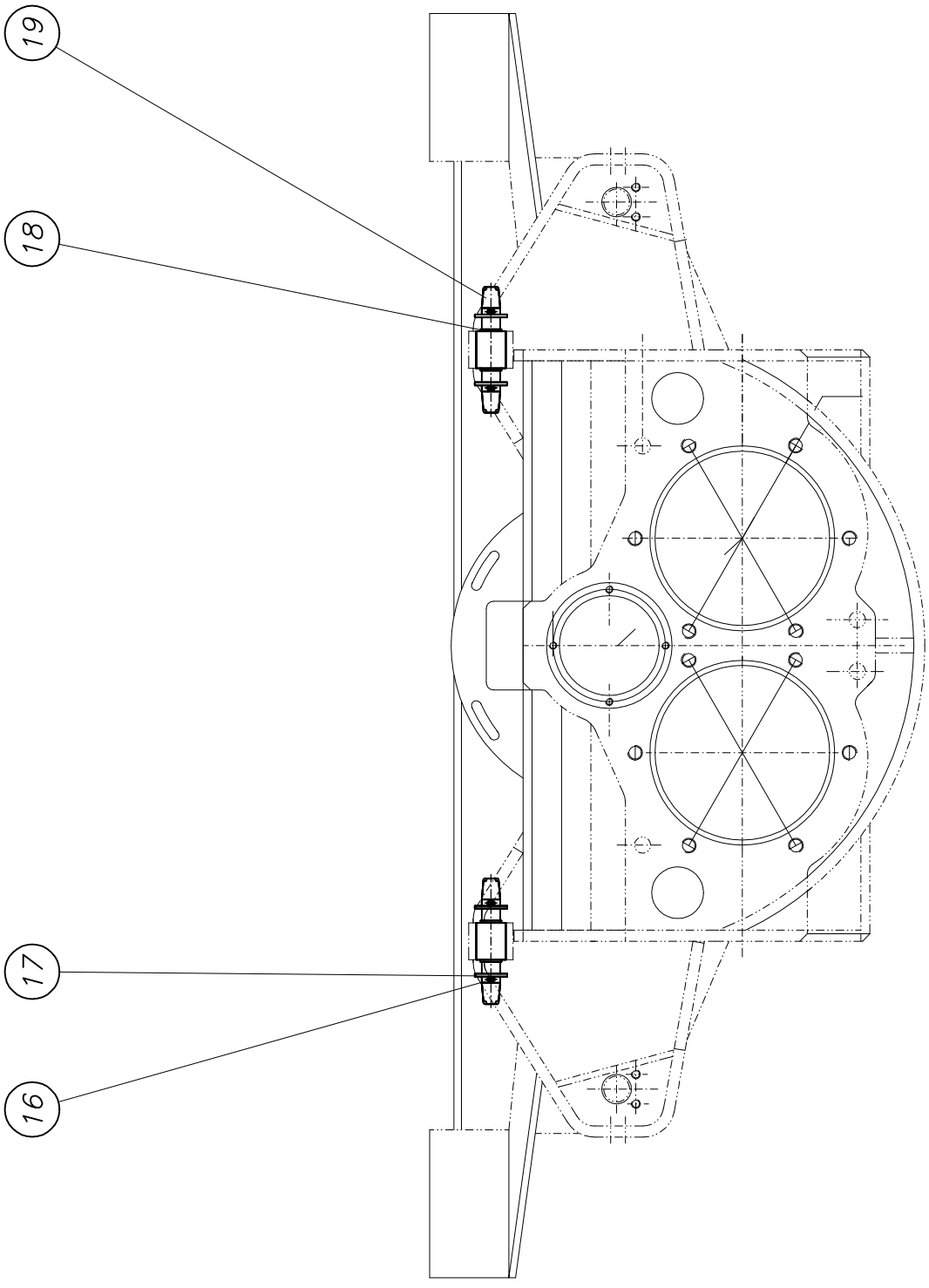

PARTS LIST

22.06.05 10:12:42

part list	description	created	index	valid from	valid to
B115001	pump support funnel	13.10.03 ute			

pos	description stock	ident-no dimensions	DIN material	index	weigth Kg	quantity unit
16	pin	WAI100940				4,00 Stk
17	washer 26, DIN 126	WAI103411				4,00 Stk
18	rubber buffer 40 x 25 x 50	WAI102489			0,21	2,00 Stk
19	bolt	B113021 Rd 30x175	1013 42CrMo4V	a 13.02.02	0,65	2,00 Stk

Schmieranlage kpl.
lubrication system cpl.

B 18 5 003a **1**

Waitzinger
Baumaschinen GmbH

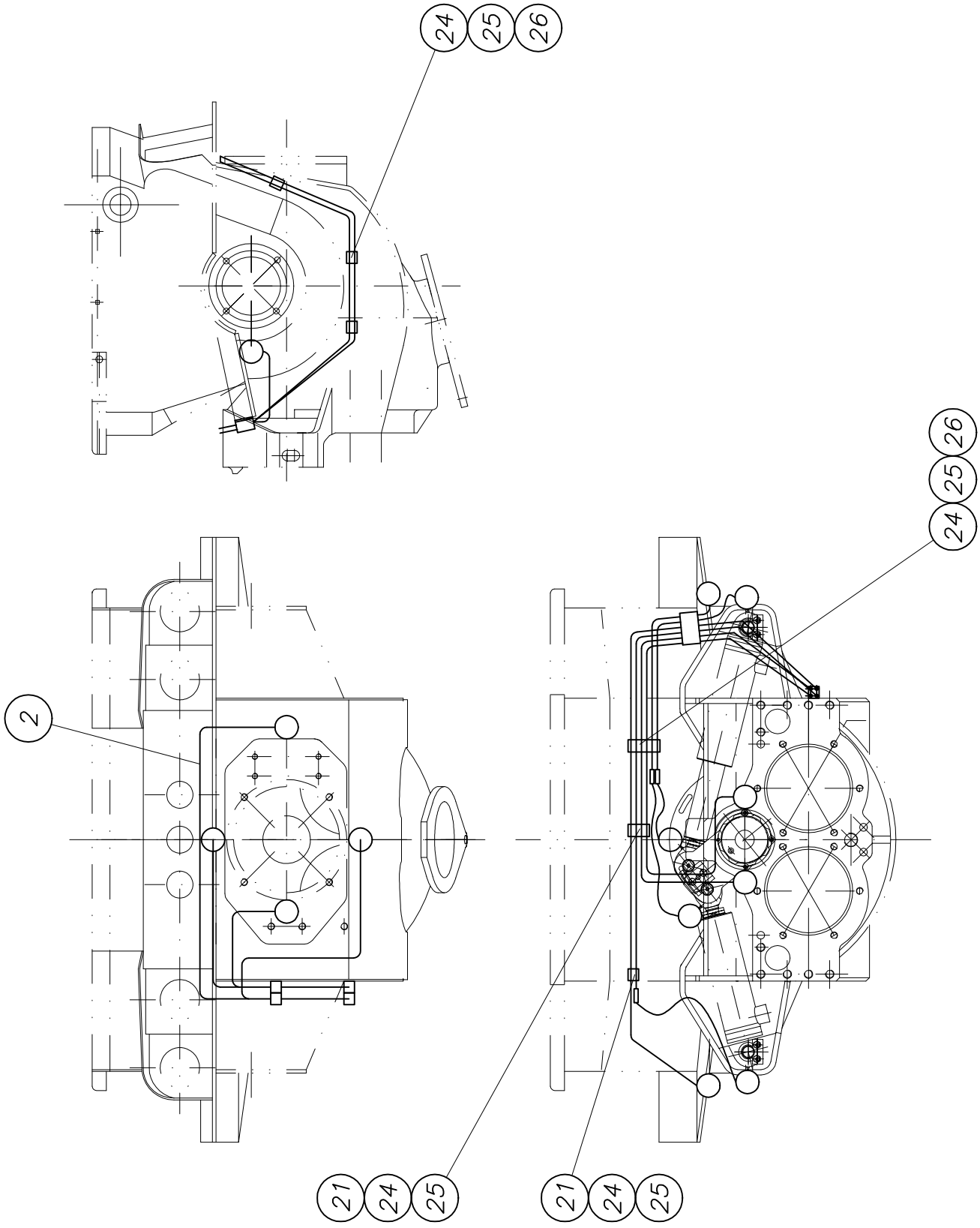

Schmieranlage kpl.
lubrication system cpl.

B 18 5 003a **2**

Waitzinger
Baumaschinen GmbH

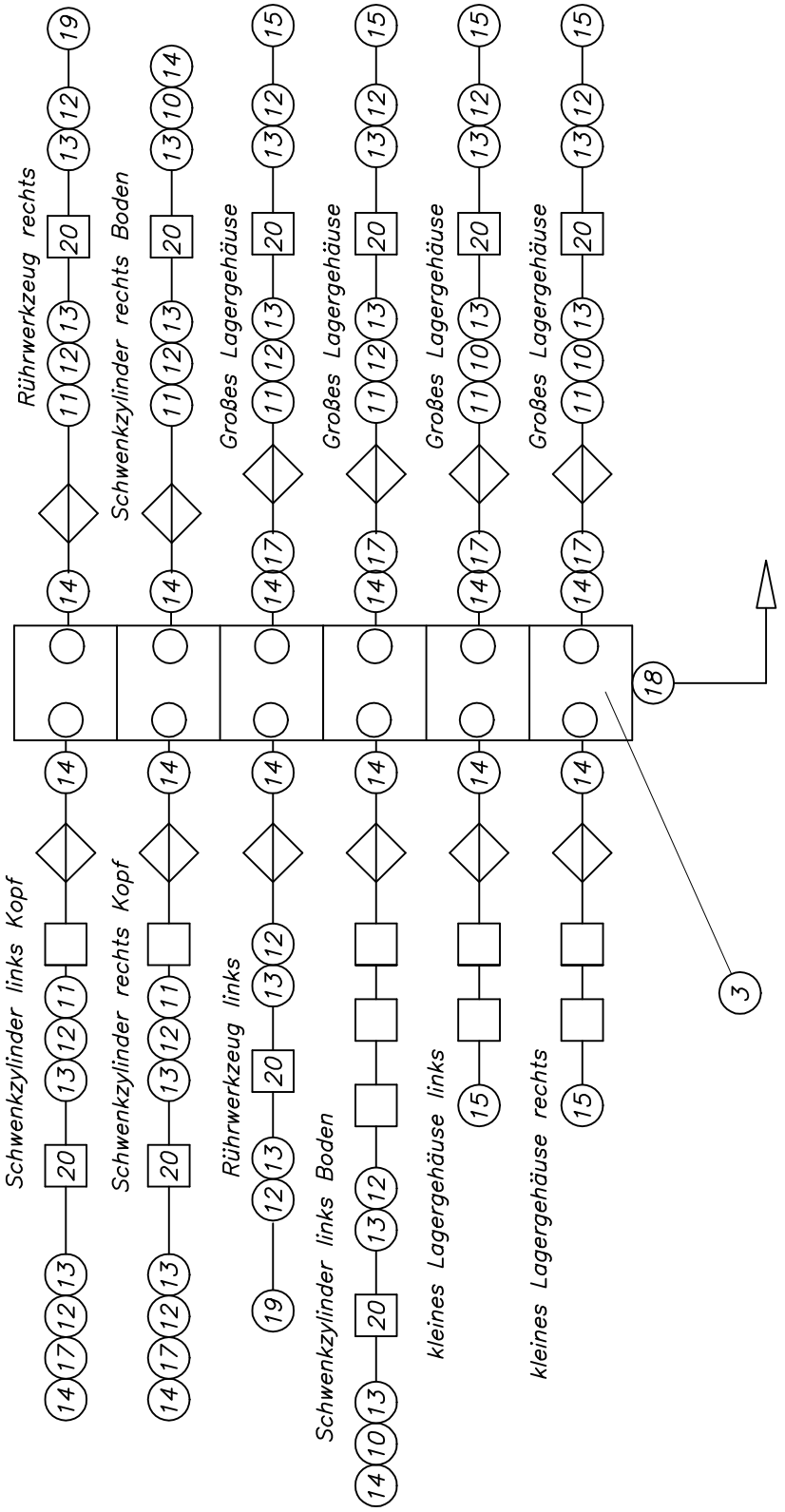

PARTS LIST

22.06.05 10:13:14

part list	description	created	index	valid from	valid to
B185003	lubrication system complete	15.10.03 ek	a	29.07.04	

pos	description stock	ident-no dimensions	DIN material	index	weigth Kg	quantity unit
2	set of pipes for greasing system	WAI106760				1,00 Stk
3	lubrication distributor complete (12) own parts list	WAI105657			0,01	1,00 Stk
10	threaded sleeve, 90 degrees	WAI102643			0,02	4,00 Stk
11	straight couplings L6	WAI105282				8,00 Stk
12	hose connecting piece, DN6, short	WAI100253			0,01	16,00 Stk
13	threaded sleeve	WAI100254			0,01	20,00 Stk
14	straight male stud couplings L6M	WAI100546			0,03	16,00 Stk
15	throttlefree banjo elbows L6M	WAI102284				6,00 Stk
17	adjustable elbow bodies L6	WAI102664			0,02	8,00 Stk
18	straight male stud couplings L6M14 x 1,5	WAI102665			0,04	1,00 Stk
19	male stud LL6M 6 x 1	WAI102603				2,00 Stk
20	plastic pipe 8.4 x 2.1	WAI100255			0,05	6,00 Mtr
21	hexagon screw	WAI102109			0,01	2,00 Stk
24	pipe clip 6 mm (double)	WAI105281				8,00 Stk
25	welding plate for pipe clip	WAI105422			0,03	2,00 Stk
26	hexagon screw M 6 x 60 DIN 931 8.8	WAI104065				3,00 Stk
27	cable tie 200x3.6, black	WAI103137				10,00 Stk

PARTS LIST

28.09.05 09:49:46

part list	description	created	index	valid from	valid to
b195065R1	conveying pipe line 6"	20.07.05 TECHNIK			

pos	description stock	ident-no dimensions	DIN material	index	weigth Kg	quantity unit
1	hinge own parts list	B190004			6,00	1,00 Stk
2	pin	B190008 Rd 40x315	1543 669		3,00	1,00 Stk
3	locking pin complete own parts list	B193008		a	3,00	1,00 Stk
4	locking wedge complete own parts list	B194046			1,85	1,00 Stk
10	cheese head screw M 16 x 40	WAI102859				4,00 Stk
11	spring washer A16	WAI103489			0,01	4,00 Stk
12	O-ring 193 x 10	WAI103563			0,05	1,00 Stk
13	cheese head screw M20 x 50	WAI102854				2,00 Stk
22	locking ring	WAI102865				2,00 Stk
23	key ring	WAI104636				2,00 Stk
24	chain 4mm	WAI103732				1,00 mtr

Trichteroberteil kpl.

hopper upper part cpl.

B 22 5 055

Waitzinger
Baumaschinen GmbH

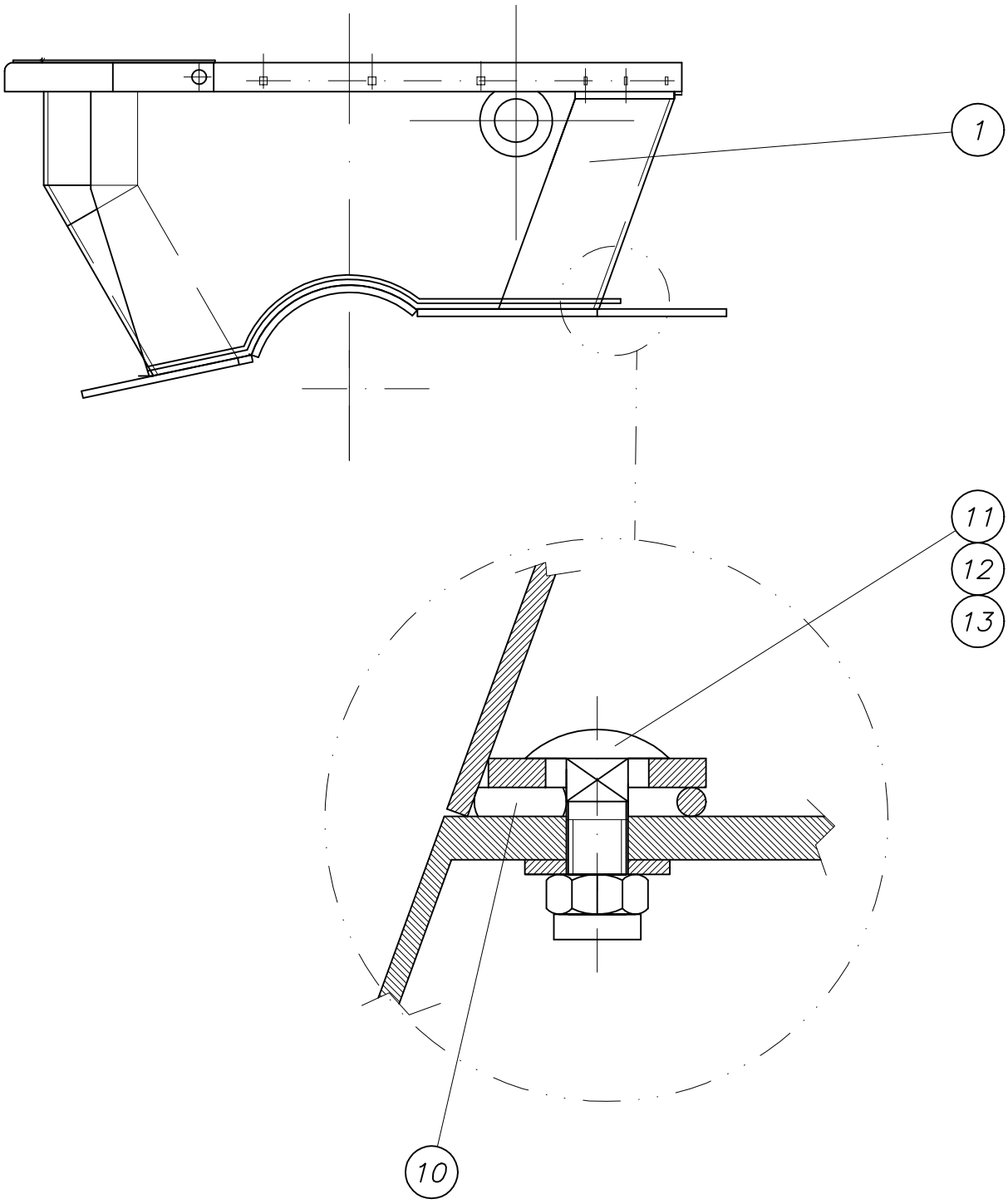

PARTS LIST

22.06.05 10:14:34

part list	description	created	index	valid from	valid to
B225055	hopper upper part	11.11.02 Mi			

pos	description stock	ident-no dimensions	DIN material	index	weigth Kg	quantity unit
1	kopper upper part own parts list	B175011		a 30.05.05	86,00	1,00 Stk
10	expanded rubber	WAI103309				4,00 Mtr
11	cup square neck bolt M 16 x 50	WAI105131				4,00 Stk
12	nut M16 DIN 985	WAI102330				4,00 Stk
13	washer DIN 6916 17	WAI101558			0,02	4,00 Stk

Gitterrost kpl.

grid cpl.

B 22 5 040c

Waitzinger
Baumaschinen GmbH

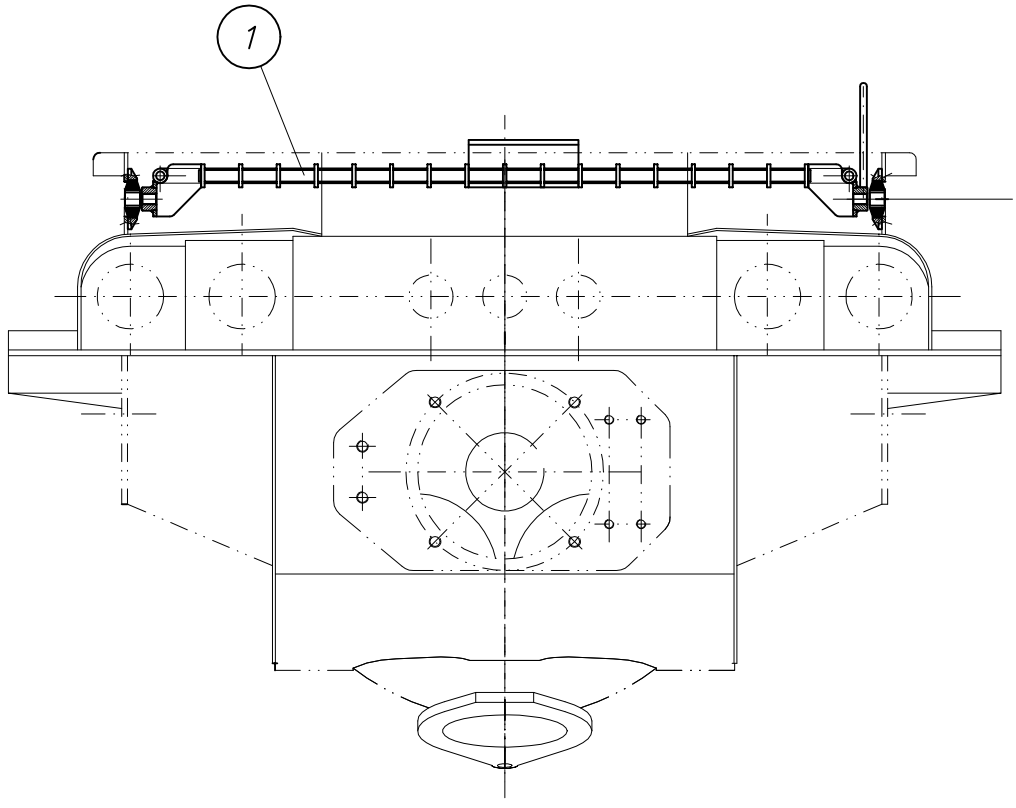

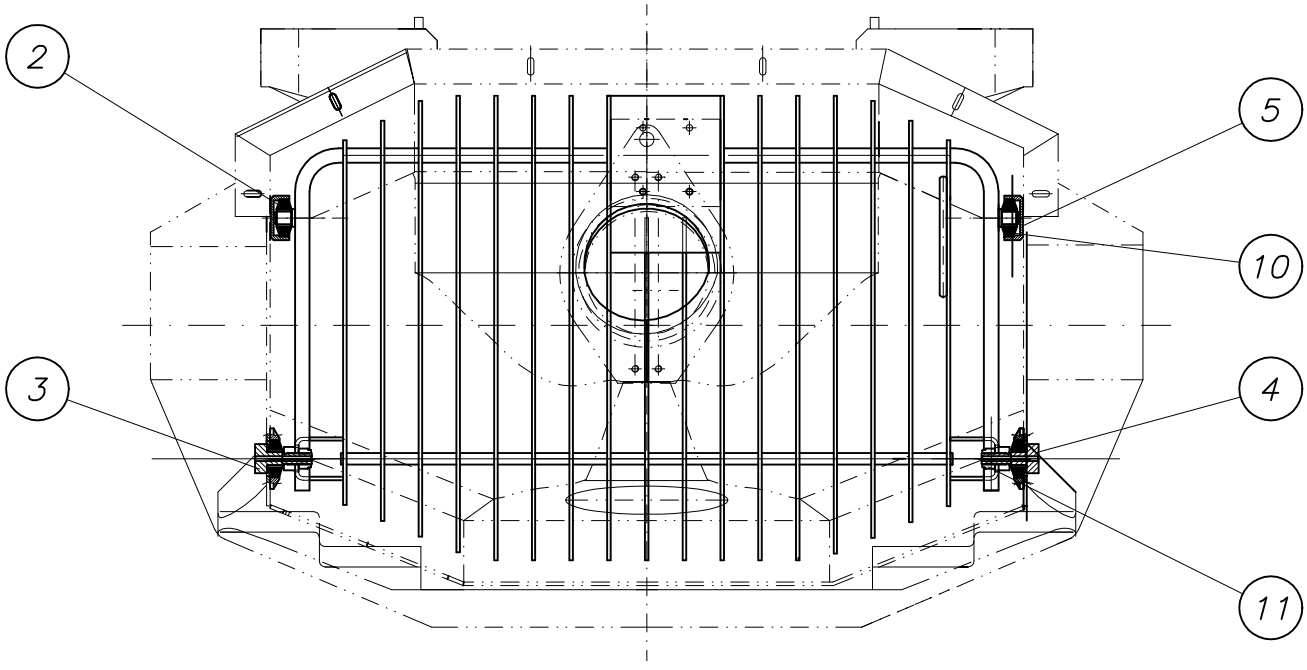

PARTS LIST

09.02.06 10:31:00

part list	description	created	index	valid from	valid to
B225040	grid cpl.	29.01.01 Mi	c	19.12.05	

pos	description stock	ident-no dimensions	DIN material	index	weigth Kg	quantity unit
1	grate own parts list	B225010		d 21.12.05	33,42	1,00 Stk
2	housing for grating	B223061 Rd 80x20	1013 S355J2G3		0,50	1,00 Stk
3	bolt	B225041 Rd 50x104	1013 St52-3	b 05.04.05	0,20	1,00 Stk
4	bolt	B225085 Rd 50x109	1013 St52-3	a 05.04.05	0,20	1,00 Stk
5	handle for grating own parts list	B225094		a 02.02.06	0,95	1,00 Stk
10	rubber buffer 65 x 22,5 x 26	WAI102490			0,17	4,00 Stk
11	nut M20 DIN 985	WAI106610				2,00 Stk

Gummischürze kpl.

rubber apron cpl.

B 22 5 045a

Waitzinger
Baumaschinen GmbH

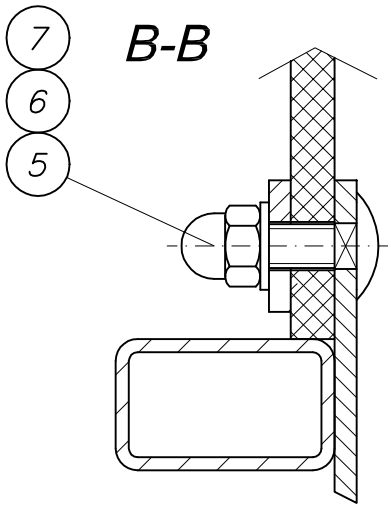

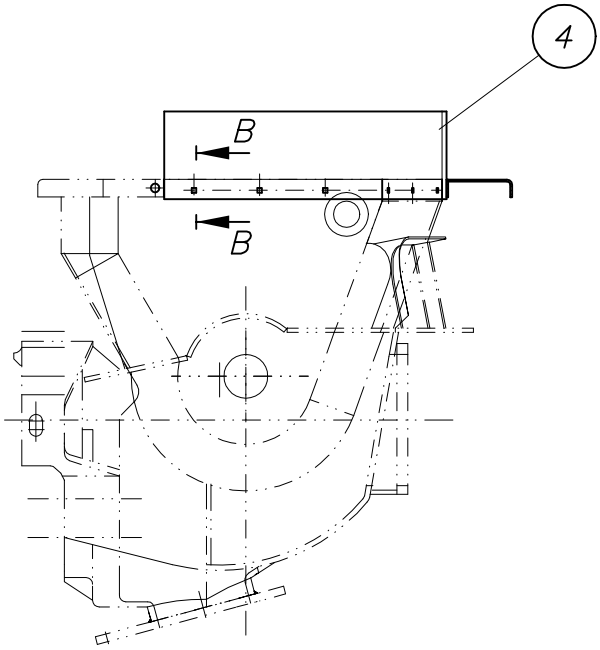

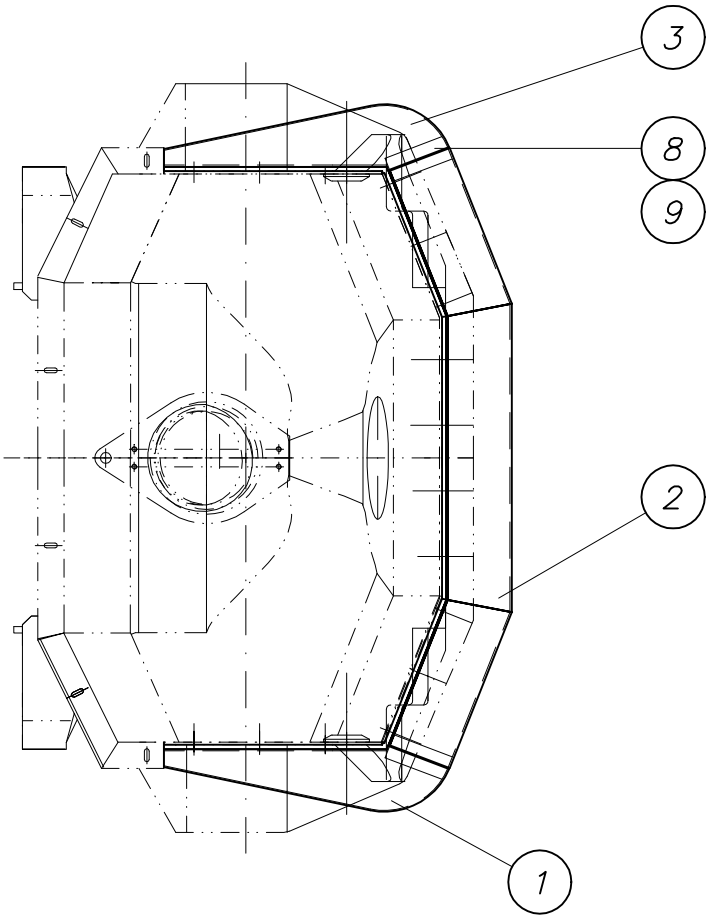

PARTS LIST

22.06.05 10:15:29

part list	description	created	index	valid from	valid to
B225045	rubber apron cpl	07.03.01 Mi	a	04.04.03	

pos	description stock	ident-no dimensions	DIN material	index	weigth Kg	quantity unit
1	strip	B225042 Bl 4x220x701	1543/EN10029 St37-2	a 04.04.03	2,60	1,00 Stk
2	strip cpl. own parts list	B225053		b 02.03.04	10,00	1,00 Stk
3	strip	B225054 Bl 4x220x701	1543/EN10029 St37-2	b 30.11.04	2,60	1,00 Stk
4	rubber apron	B224013 Gummi 10x200x31		a 25.02.00		1,00 Stk
5	cup square neck bolt M 10 x 30	WAI103972				12,00 Stk
6	washer 10.5	WAI101559			0,00	12,00 Stk
7	cap nut M10	WAI101847				12,00 Stk
8	countersunk screw	WAI103176				4,00 Stk
9	hex. nut M6	WAI102998				4,00 Stk

Förderkolbenschmierung kpl.

conveying cyl. lubrication cpl.

B 18 3 006b

Waitzinger
Baumaschinen GmbH

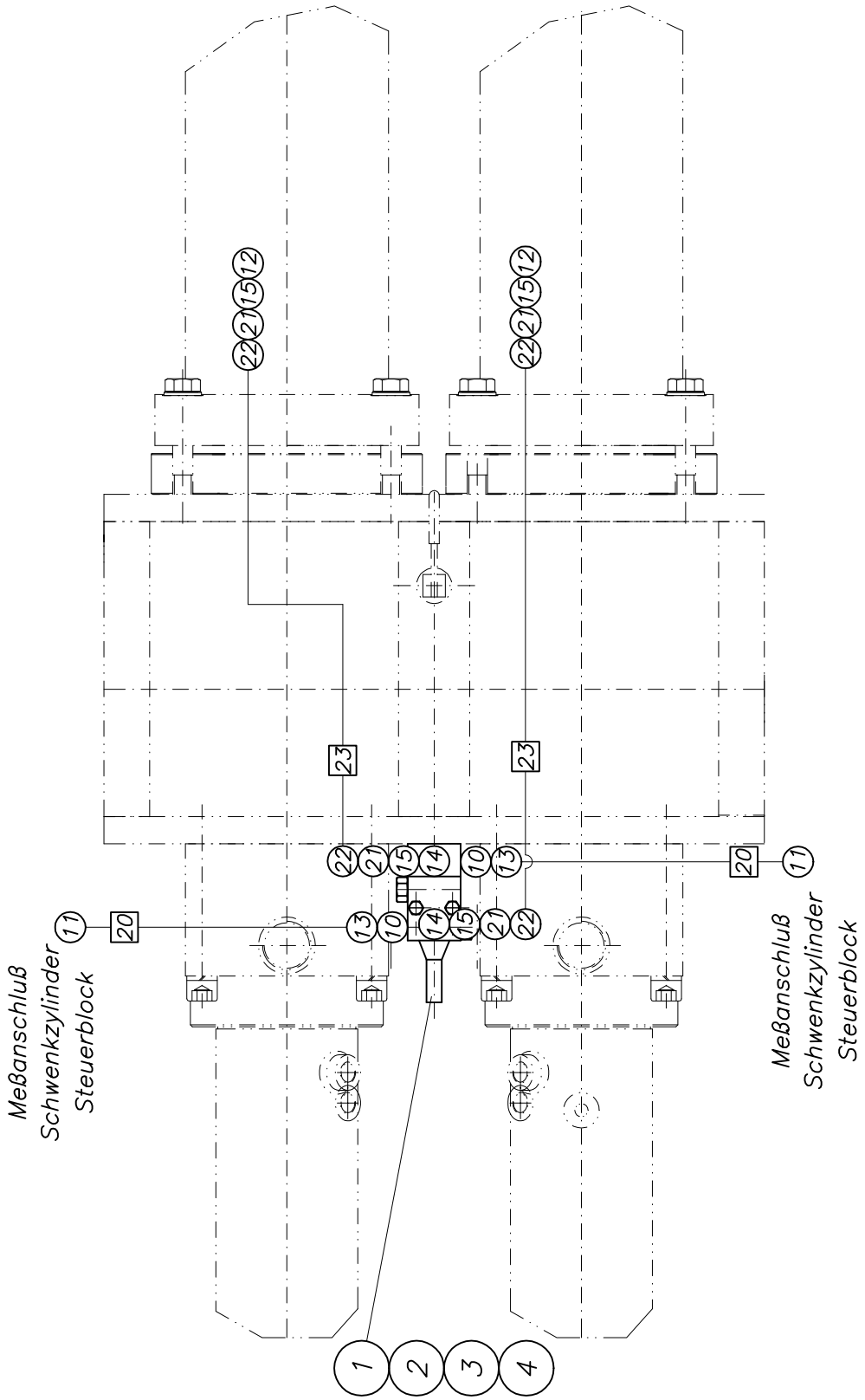

PARTS LIST

27.06.05 08:51:45

part list	description	created	index	valid from	valid to
B183006	conveyor cyl. autom. cpl.	15.01.99 Mi	b	01.03.05	

pos	description stock	ident-no dimensions	DIN material	index	weigth Kg	quantity unit
1	holder for distributor	B183008 Bl 8x52x95	1543/EN10029 St37-2		0,30	1,00 Stk
2	distributor VSKH 2-D	WAI104402				1,00 Stk
3	hexagon bolt M 8 x 70	WAI105277				2,00 Stk
4	spring washer A8 DIN 127 VERZ.	WAI102205			0,00	2,00 Stk
10	straight male stud couplings L8R 1/4"	WAI105202				2,00 Stk
11	swivel barrel tee L8	WAI100556			0,08	2,00 Stk
12	straight male stud couplings L6M	WAI103737				2,00 Stk
13	adjustable elbow bodies L8	WAI100589				2,00 Stk
14	male stud couplings L6 R 1/4" WD	WAI105434				2,00 Stk
15	adjustable elbow bodies L6	WAI102664			0,02	4,00 Stk
20	hydraulic hose DN 6 x 1000	WAI103234				2,00 Stk
21	hose connecting piece, DN6, short	WAI100253			0,01	2,00 Stk
22	threaded sleeve	WAI100254			0,01	2,00 Stk
23	plastic pipe 8.4 x 2.1	WAI100255			0,05	3,00 Mtr

Trichterabdeckung kpl.

cover for hopper cpl.

B 22 5 090a

Waitzinger
Baumaschinen GmbH

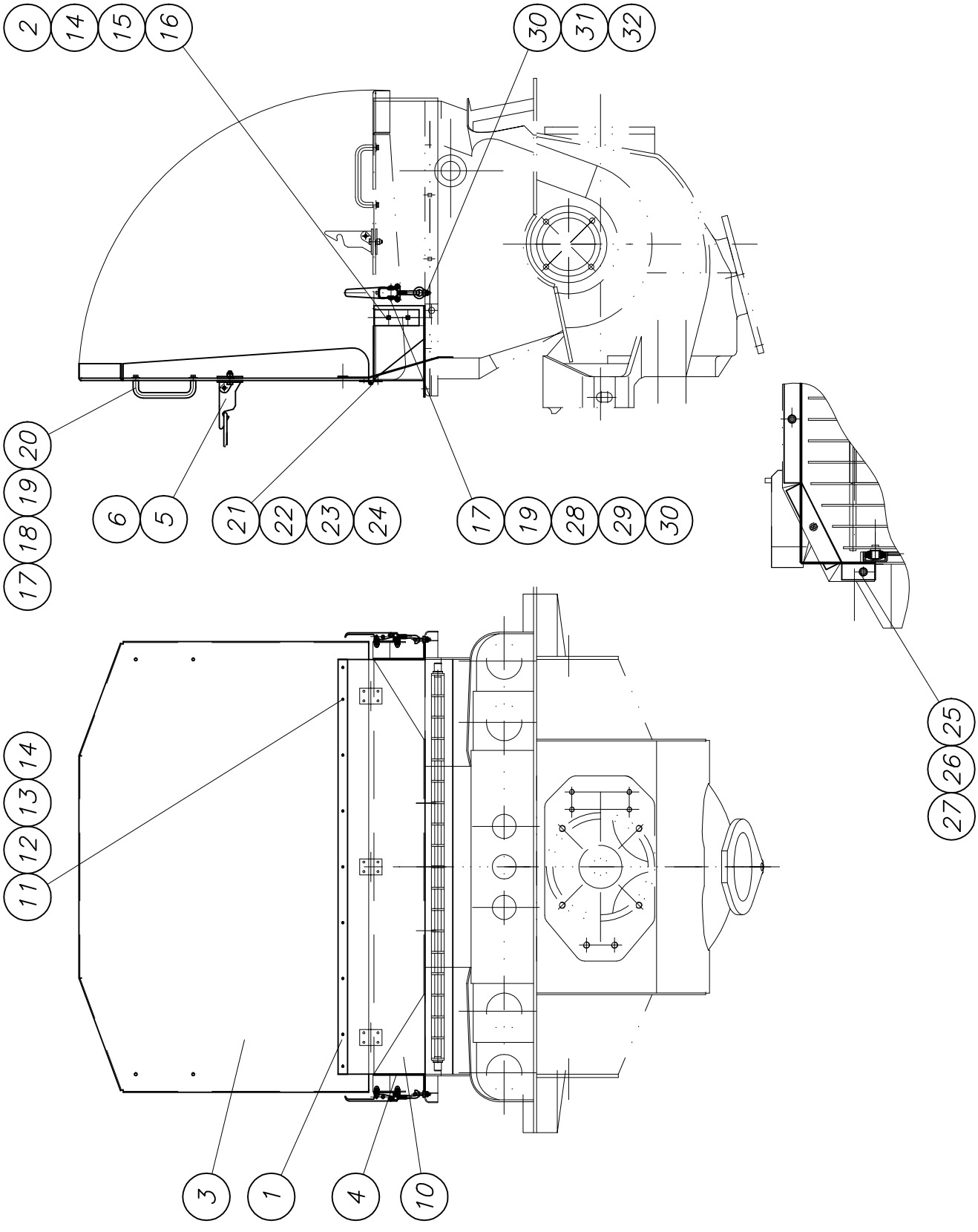

PARTS LIST

part list	description	created	index	valid from	valid to
B225090	cover for hopper cpl.	18.05.05 hbk	a	26.10.05	

pos	description stock	ident-no dimensions	DIN material	index	weigth Kg	quantity unit
1	plate	B255063 Bl4x30x1280	10029 S235J2G3	a 19.07.05	1,20	1,00 Stk
2	plate	B255064 Bl5x50x140	10029 S235J2G3		0,27	2,00 Stk
3	splash board own parts list	B255065	 Alu	c 27.07.05	12,00	1,00 Stk
4	splash board own parts list	B255075			15,00	1,00 Stk
5	hook cpl. own parts list	B224025		a 06.09.05	0,90	1,00 Stk
6	holder	B224021 Rd 10x1060	1013 S355J2G3	a 23.05.05	0,65	1,00 Stk
10	rubber apron	WAI107190				1,00 Stk
11	countersunk head screw M6x20	WAI103153				9,00 Stk
12	washer 6 mm	WAI106432				9,00 Stk
13	spring washer A6	WAI103000				9,00 Stk
14	cup square neck bolt M 10 x 30	WAI103972				4,00 Stk
15	washer 10.5	WAI101559			0,20	4,00 Stk
16	cap nut M10	WAI101847				4,00 Stk
17	hexagon bolt M 8 x 20	WAI101837				10,00 Stk
18	washer 8.4 DIN9021	WAI102882				4,00 Stk
19	spring washer A8 DIN 127 VERZ.	WAI102205			0,00	10,00 Stk
20	bow grip	WAI104441				2,00 Stk
21	hinge	WAI103237			0,10	3,00 Stk
22	countersunk screw	WAI103176				12,00 Stk
23	washer	WAI103572				12,00 Stk

PARTS LIST

04.11.05 08:41:55

part list	description	created	index	valid from	valid to
B225090	cover for hopper cpl.	18.05.05 hbk	a	26.10.05	

pos	description stock	ident-no dimensions	DIN material	index	weigth Kg	quantity unit
24	hex. nut M6	WAI101624				12,00 Stk
25	cup square neck bolt M 10 x 25	WAI103971				6,00 Stk
26	hex. nut M10 DIN985 8.	WAI102125			0,01	6,00 Stk
27	washer 10.5	WAI101559			0,20	6,00 Stk
28	excentric lever, TUB043050	WAI109856				2,00 Stk
29	cap nut M8	WAI104933				6,00 Stk
30	washer 8.4	WAI101625				8,00 Stk
31	ring screw M 08	WAI109871			0,10	2,00 Stk
32	stop nut M8 DIN985 8. VERZ.	WAI102111			0,05	2,00 Stk

Rührwerk mit Antrieb kpl.

agitator with drive cpl.

B 25 5 080

Waitzinger
Baumaschinen GmbH

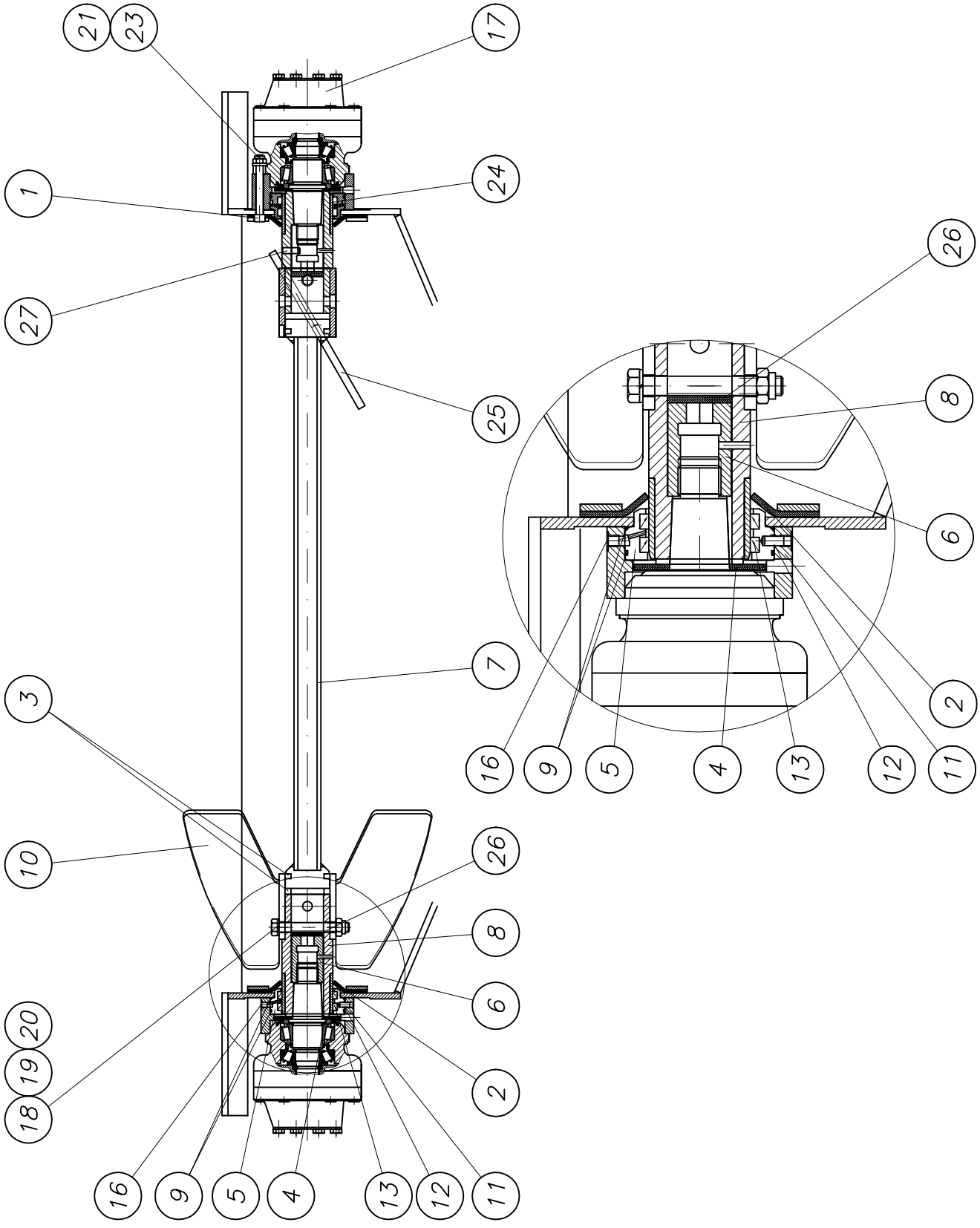

06.07.2005

PARTS LIST

28.09.05 09:53:53

part list	description	created	index	valid from	valid to
B255080	agitator with drive	13.06.05 TECHNIK			

pos	description stock	ident-no dimensions	DIN material	index	weigth Kg	quantity unit
1	washer cpl. own parts list	B255092			1,00	2,00 Stk
2	seal disc	B255044 5xd 240	Gummi 70 Shore	a 31.03.04		2,00 Stk
3	sealing	B255083 Gummi 8x 76x 76	Gummi 60Shore			4,00 Stk
4	seal disc	B254109 5xDurchm.110	Gummi 60 Sho			2,00 Stk
5	sealing carrier	B255078 Rd 140x 50	DIN 1013 S355J2G3		0,31	2,00 Stk
6	shell	B255025 Rd 50x84	1013 S355J2G3	a 17.09.03	0,70	2,00 Stk
7	agitat shaft complete own parts list	B255079				1,00 Stk
8	shaft	B255028 Rd 85x208	1013 S355J2G3	c 01.07.05	5,00	2,00 Stk
9	O-ring 120 x 3	WAI108298				4,00 Stk
10	agitator cpl. left own parts list	B255085			4,50	1,00 Stk
11	motor support	B255076 Bl. 70x 155x 15	DIN EN10029 S235J2G3		4,80	2,00 Stk
12	set screw M 10x1x 20	WAI109709				2,00 Stk
13	groove ring 85-100-11.5	WAI102544			0,02	4,00 Stk
16	male stud LL6M 6 x 1	WAI102603				2,00 Stk
17	hydraulic motor MCR 3D 280 own parts list	WAI101240			28,00	2,00 Stk
18	washer DIN 6916 17	WAI101558			0,02	4,00 Stk
19	nut M16 DIN 985	WAI102330				4,00 Stk
20	hexagon bolt	WAI107513			0,21	4,00 Stk
21	hex. nut M12 DIN 985 8. VERZ.	WAI101626				2,00 Stk
23	washer	WAI102962			0,01	8,00 Stk

PARTS LIST

28.09.05 09:53:53

part list	description	created	index	valid from	valid to
B255080	agitator with drive	13.06.05 TECHNIK			

pos	description stock	ident-no dimensions	DIN material	index	weigth Kg	quantity unit
24	wear sleeve	B253020 Rohr 101.6x13.5	2448 StE690	b 30.03.99	0,34	2,00 Stk
25	agitator cpl. right own parts list	B255088		a 28.07.05	4,50	1,00 Stk
26	seal disc	B255057 8xD53	Gummi 70 Shore			2,00 Stk
27	straight pin 10 H 6 x 30	WAI103065				2,00 Stk

Hydraulikmotor

hydraulic engine

WAI 101240

Waitzinger
Baumaschinen GmbH

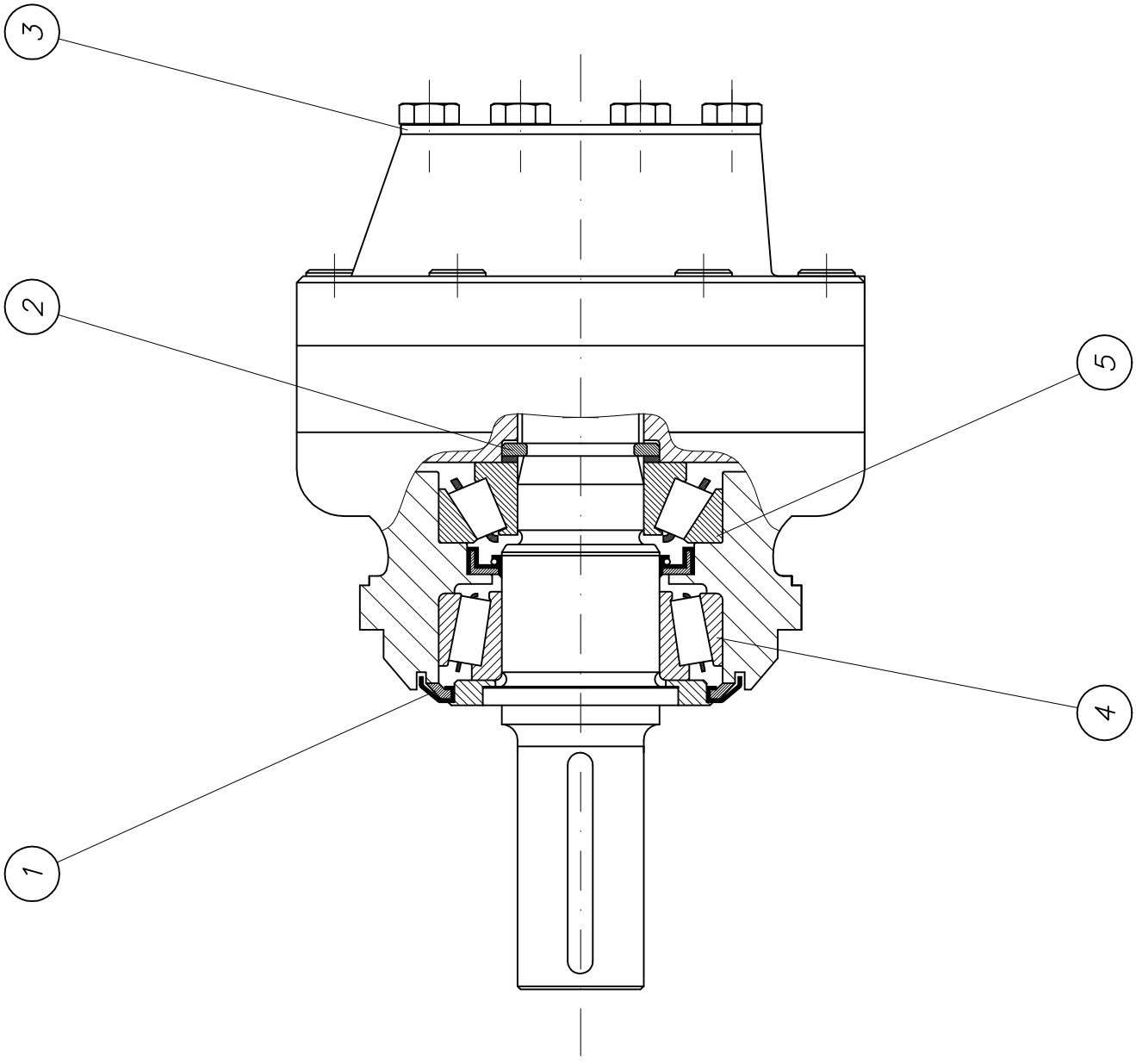

02.08.2001

PARTS LIST

22.06.05 10:16:57

part list	description	created	index	valid from	valid to
WAI101240	hydraulic motor MCR 3D 280	27.08.99 Mi			

pos	description stock	ident-no dimensions	DIN material	index	weigth Kg	quantity unit
1	sealing set own parts list	WAI101241			0,10	1,00 Stk
2	split ring	WAI104395				1,00 Stk
3	cover f. mcr3 hydraulic motor	WAI104755				1,00 Stk
4	roller bearing 850717	WAI105715			0,70	1,00 Stk
5	roller bearing no. 851416	WAI105716			0,80	1,00 Stk

Übersicht B 30 - B 39

over view B 30 - B 39

Waitzinger
Baumaschinen GmbH

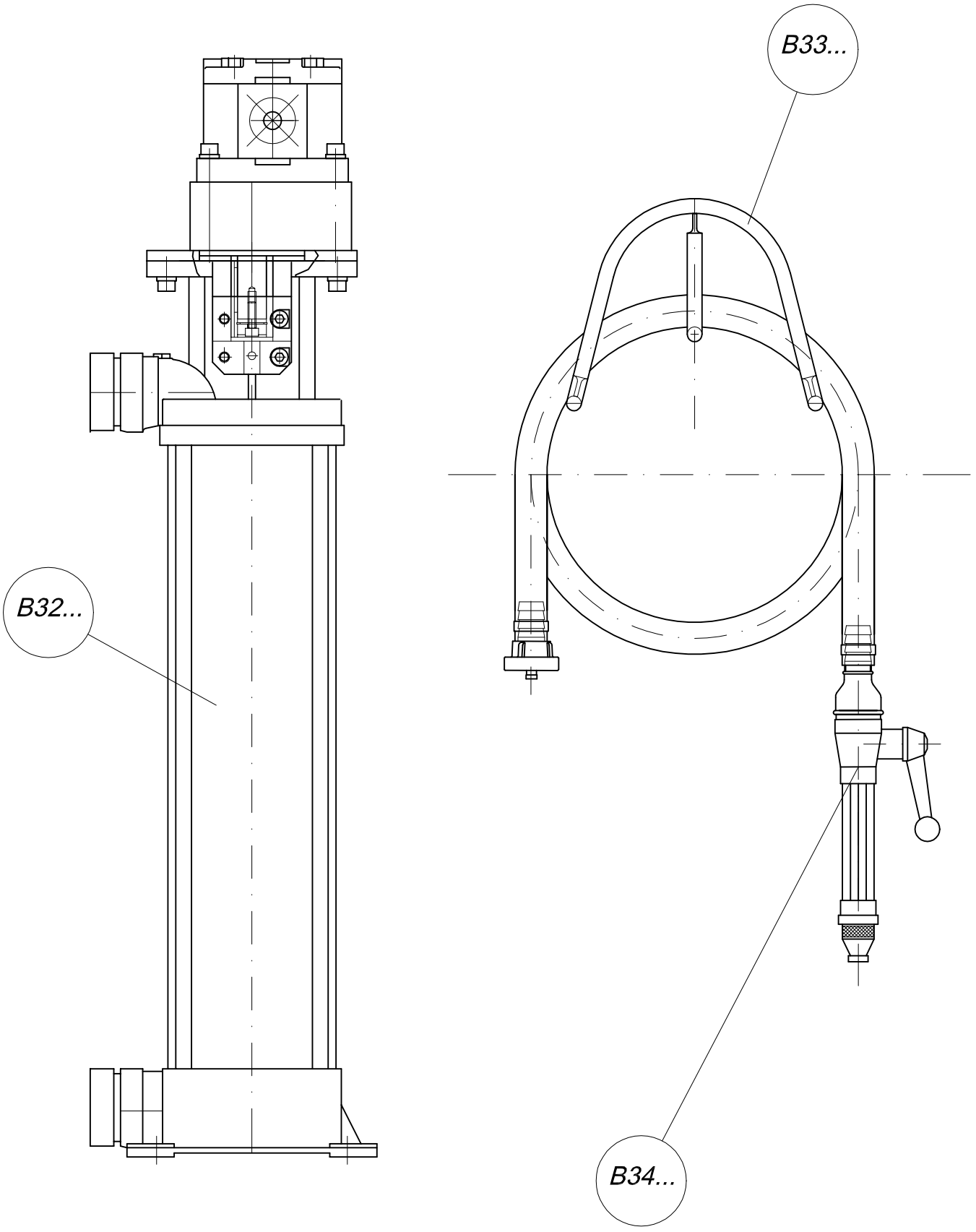

22.07.2002

Wasserpumpe kpl.

water pump cpl.

B 32 3 070

Waitzinger
Baumaschinen GmbH

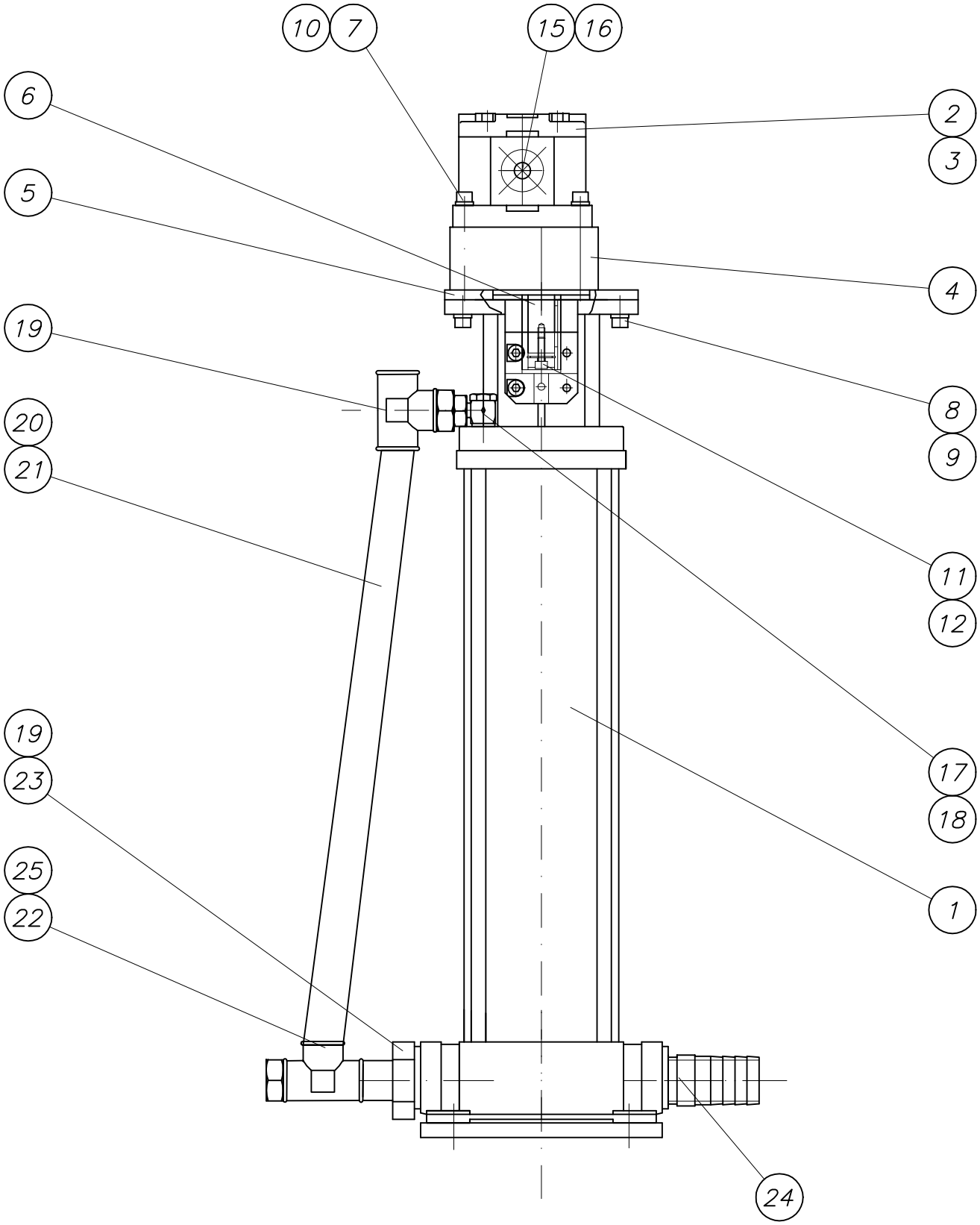

PARTS LIST

27.06.05 10:56:48

part list	description	created	index	valid from	valid to
B323070	water pump with drive	02.04.03 rhbk			

pos	description stock	ident-no dimensions	DIN material	index	weigth Kg	quantity unit
1	water pump INV	WAI108082				1,00 Stk
2	gear motor own parts list	WAI105922				1,00 Stk
3	splined coupling	WAI102916				1,00 Stk
4	belt pulley support	WAI102915				1,00 Stk
5	flange	B323061 Rd 170 x12	1013 S235J2G3		1,35	1,00 Stk
6	coupling piece	B323019 Rd 38x58	670 ST50-k			1,00 Stk
7	alien bolt M 8x70	WAI105929				4,00 Stk
8	alien bolt M 8x25	WAI105930				5,00 Stk
10	spring washer	WAI100235			0,00	8,00 Stk
11	locking ring	WAI105931				1,00 Stk
12	washer	B323023 Rd 22x6	670 St50-2k		0,05	1,00 Stk
15	elbow flange coupling L15-40	WAI102678			0,23	1,00 Stk
16	elbow flange coupling L12-35	WAI105921			0,23	1,00 Stk
17	bow	WAI104163				1,00 Stk
18	thread red.adaptors"3/4-3/8"	WAI100347			0,09	1,00 Stk
19	t-piece	WAI103590				2,00 Stk
20	hose	WAI102117				0,50 Mtr
21	hose clamp 25-28 mm	WAI108309				4,00 Stk
22	hose socket	WAI105993				1,00 Stk
23	double nipple 3/4"	WAI103566				1,00 Stk
24	nipple	B323059 Rohr 42.4x4.5x9	2448 S235J2G3		0,30	1,00 Stk
25	connecting piece waterpump	B323062 Rohr 42,2x4.5x6	2448 S235J2G3		0,30	1,00 Stk

Halter für Wasserschlauch kpl.

holder for water pipe cpl.

B 33 0 020

Waitzinger
Baumaschinen GmbH

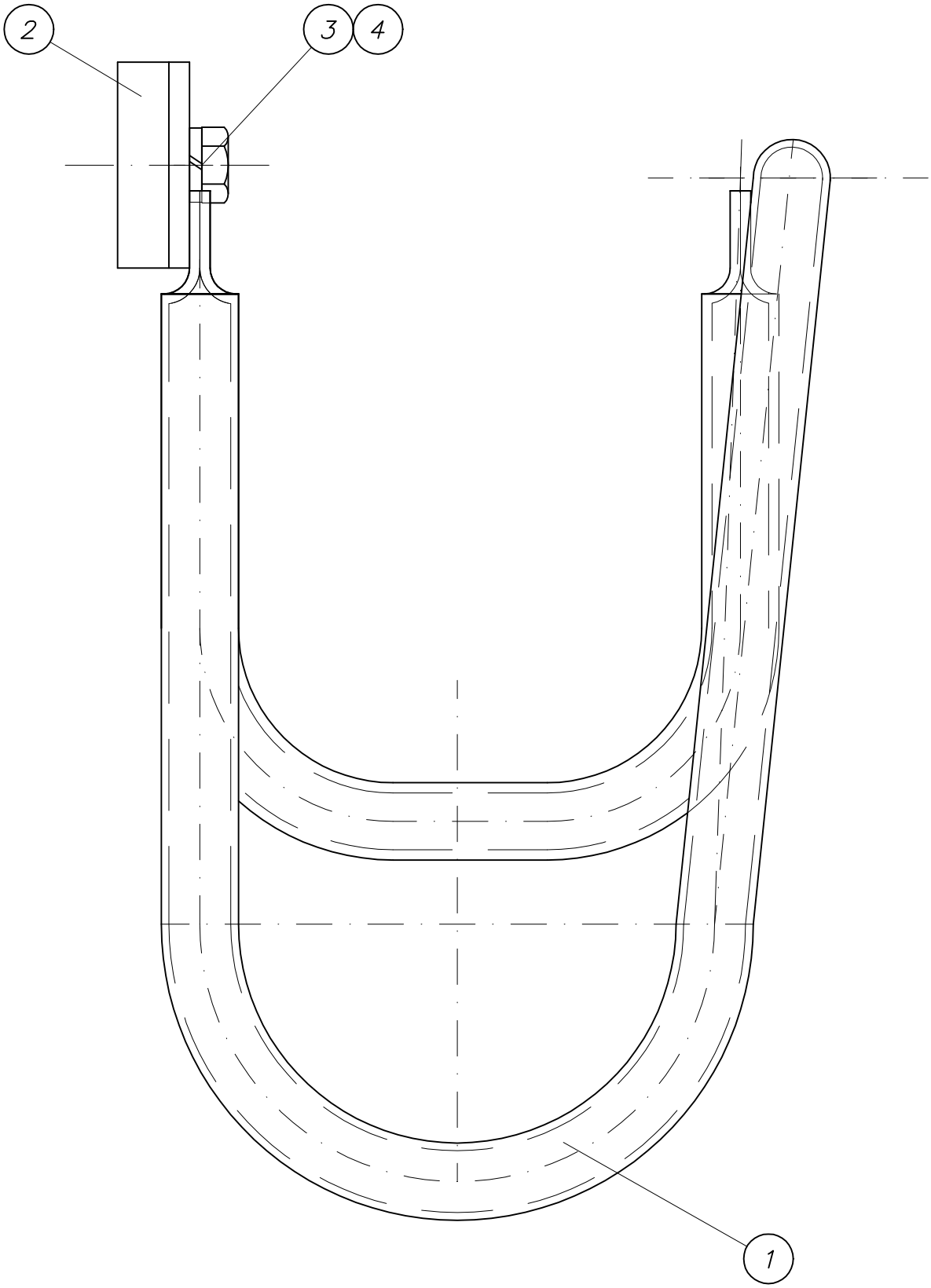

29.07.2002

PARTS LIST

27.06.05 10:58:29

part list	description	created	index	valid from	valid to
B330020	holder for water hose	06.06.02 ek			

pos	description stock	ident-no dimensions	DIN material	index	weigth Kg	quantity unit
1	holder for water hose own parts list	B330015			1,00	1,00 Stk
2	flat bar	B330018 Bl 10x40x260	1543 St 37-2	a 27.09.02	0,30	1,00 Stk
3	hexagon bolt M 8 x 12 DIN 933 8.8	WAI103274				2,00 Stk
4	spring washer A8 DIN 127 VERZ.	WAI102205			0,00	2,00 Stk

Übersicht B 40 - B 49

over view B 40 - B 49

Waitzinger
Baumaschinen GmbH

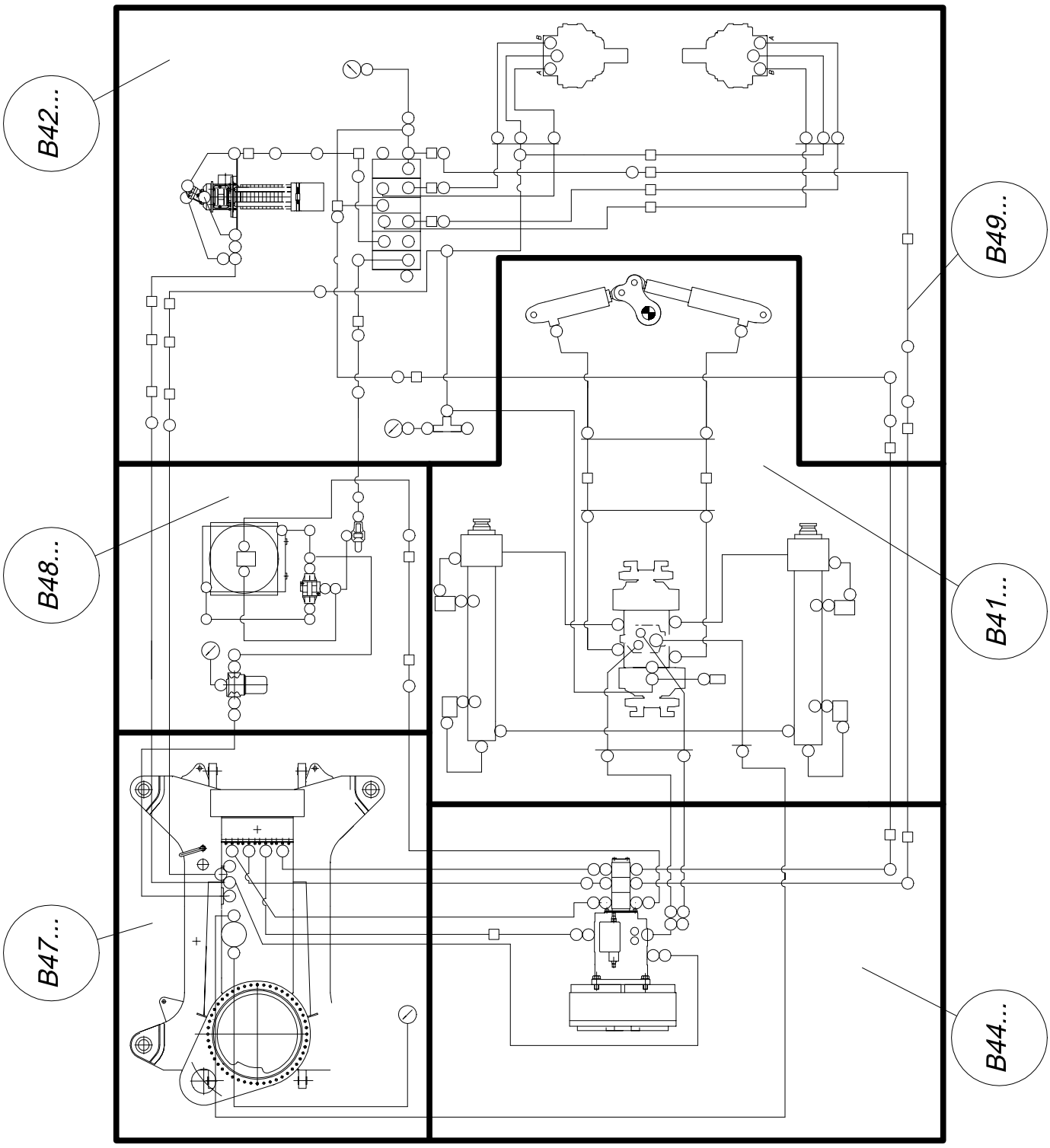

Blasenspeicher
hydraulic accumulator

WAI 103616

Waitzinger
Baumaschinen GmbH

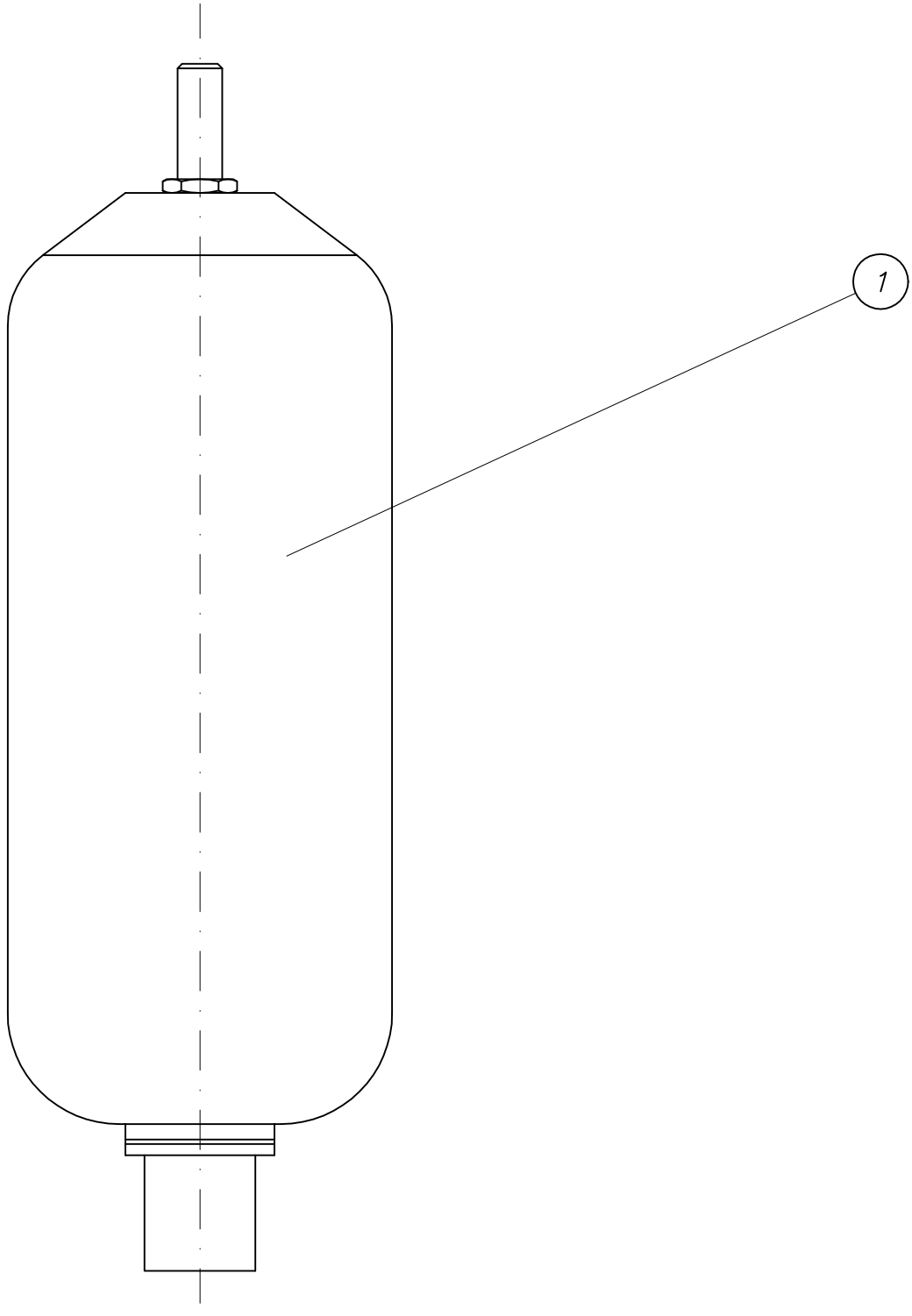

PARTS LIST

28.09.05 11:17:13

part list	description	created	index	valid from	valid to
WAI103616	hydraulic accumulator 6 liter	01.09.99 Mi			

pos	description stock	ident-no dimensions	DIN material	index	weigth Kg	quantity unit
1	spare bubble for hydraulic accumulator	WAI105555				1,00 Stk

Übersicht B 50 - B 59

over view B 50 - 59

Waitzinger
Baumaschinen GmbH

B51... Elektroschaltplan
wiring diagram

B54... Drehzahlverstellung
rpm adjustment

B56... Kabelbaum
cable loop

B56... Zubehör
accessories

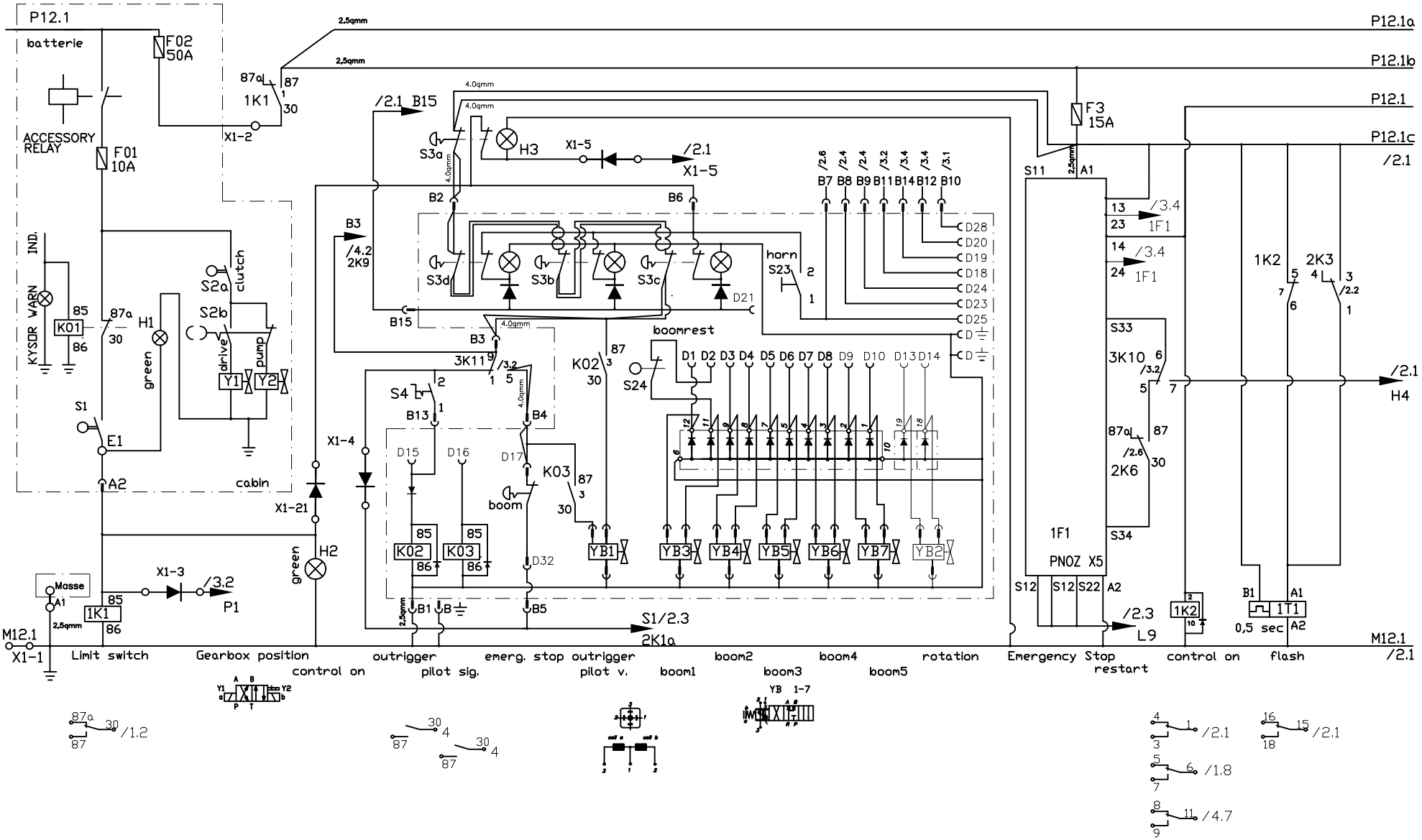

Waitzinger Baumaschinen Vertrieb und Service GmbH				FREE DIMENSION TOLERANCE DIN 7168 MEDIUM		SCALE / WEIGHT
					DATE	NAME
				DRAWN	2000/03/27	Fetzer
				CHKD.		
				APPD.		
d	siehe B_513017.doc	19.07.05	Körner			
c	siehe B_513017.doc	24.02.05	Körner	CHANGE ONLY WITH CAD		
b	siehe B_513017.doc	02.02.04	Körner			
a	siehe B_513017.doc	15.01.04	Körner			
ISSUE	MODIFICATION	DATE	NAME	ORIGINAL		

M 42.5 XXT

control panel V4
Page 1

B 51 3 017

SHEET

OF

REPLACEMENT FOR

REPLACEMENT BY

THIS INFORMATION MAY NOT BE COPIED BY A THIRD PARTY. SUBJECT TO COPYRIGHT (PARAGRAPH 1 NO. 3 OF "URHEBERRECHTSGESETZ" FROM 14.06.1991)

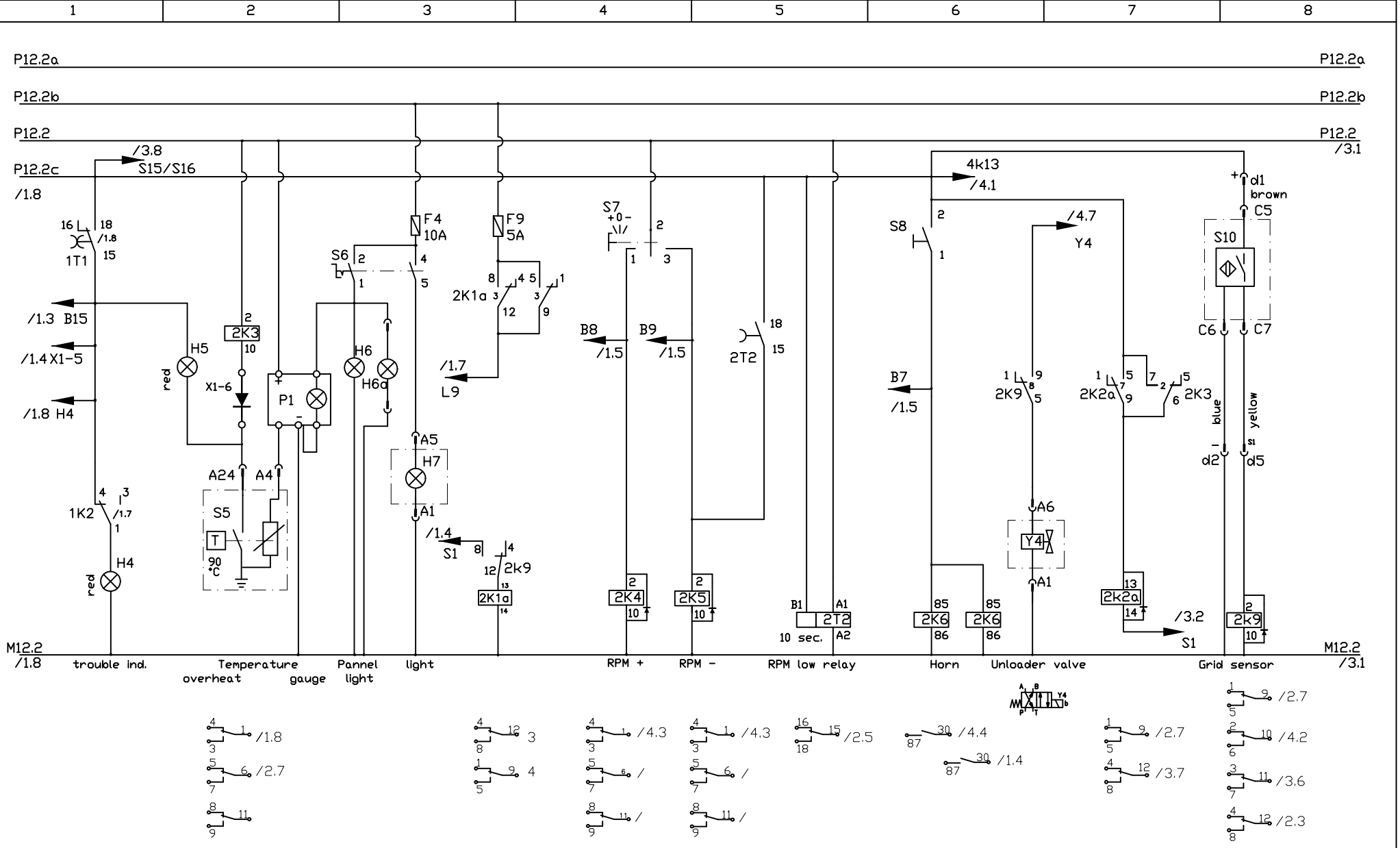

Waitzinger Baumaschinen Vertrieb und Service GmbH				FREE DIMENSION TOLERANCE DIN 7168 MEDIUM			SCALE / WEIGHT
					DATE	NAME	M 42.5 XXT
				DRAWN	2000/03/27	Fetzer	control panel V4 Page 2
				CHKD.			
				APPD.			
d	siehe B_513017.doc	19.07.05	Körner				
c	siehe B_513017.doc	24.02.05	Körner	CHANGE ONLY WITH CAD			B 51 3 017
b	siehe B_513017.doc	02.02.04	Körner				SHEET / OF
a	siehe B_513017.doc	15.01.04	Körner				
ISSUE	MODIFICATION	DATE	NAME	ORIGINAL			REPLACEMENT FOR / REPLACEMENT BY

THIS INFORMATION MAY NOT BE COPIED BY A THIRD PARTY. SUBJECT TO COPYRIGHT (PARAGRAPH 1 NO. 3 OF "URHEBERRECHTSGESETZ" FROM 14.06.1991)

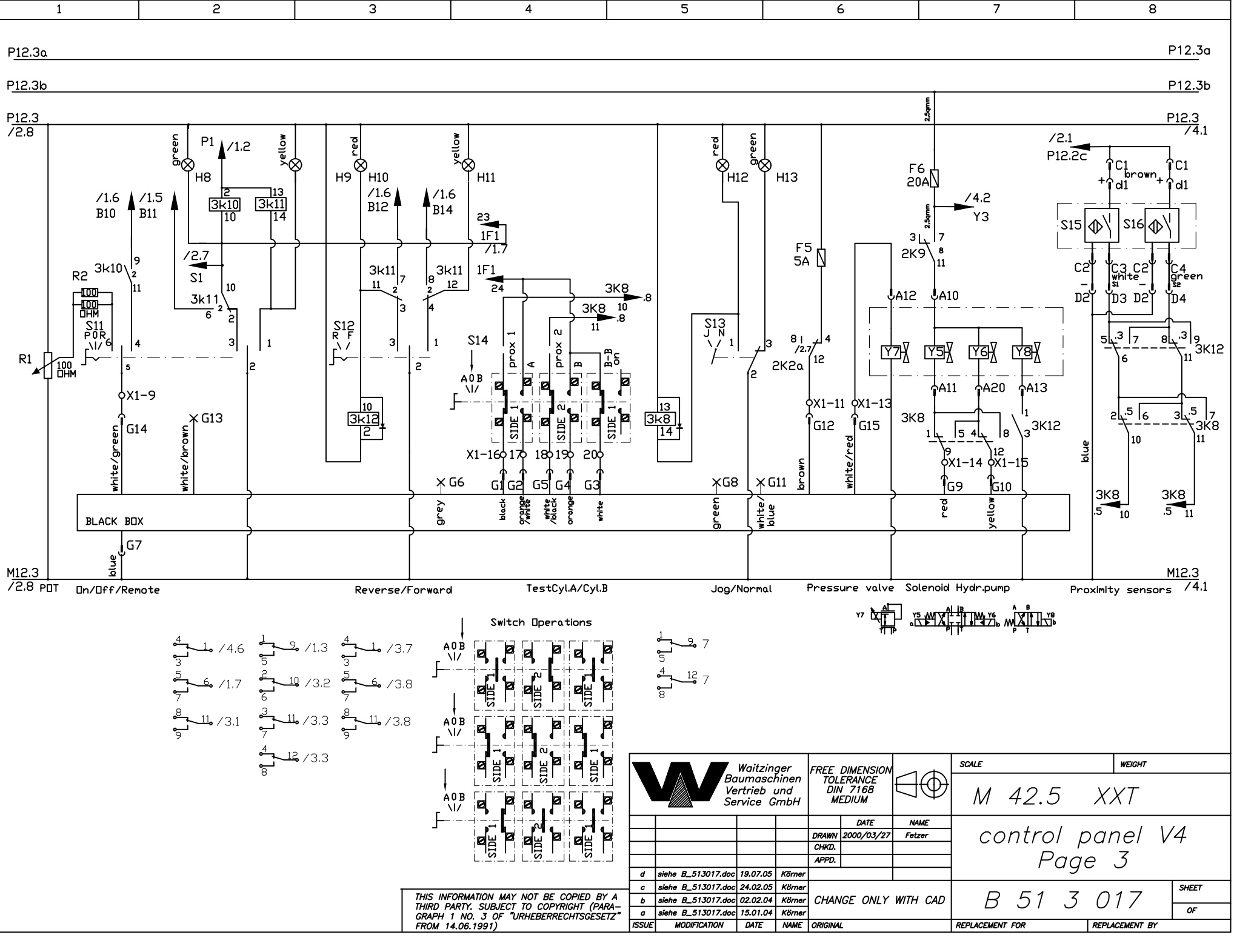

1	2	3	4	5	6	7	8

Waitzinger Baumaschinen Vertrieb und Service GmbH

FREE DIMENSION TOLERANCE DIN 7168 MEDIUM

	DATE	NAME
DRAWN	2000/03/27	Fetzer
CHKD.		
APPD.		

ISSUE	MODIFICATION	DATE	NAME
d	siehe B_513017.doc	19.07.05	Körner
c	siehe B_513017.doc	24.02.05	Körner
b	siehe B_513017.doc	02.02.04	Körner
a	siehe B_513017.doc	15.01.04	Körner
ORIGINAL			

CHANGE ONLY WITH CAD

SCALE

WEIGHT

M 42.5 XXT

control panel V4
Page 3

B 51 3 017

SHEET

OF

REPLACEMENT FOR

REPLACEMENT BY

THIS INFORMATION MAY NOT BE COPIED BY A THIRD PARTY. SUBJECT TO COPYRIGHT (PARAGRAPH 1 NO. 3 OF "URHEBERRECHTSGESETZ" FROM 14.06.1991)

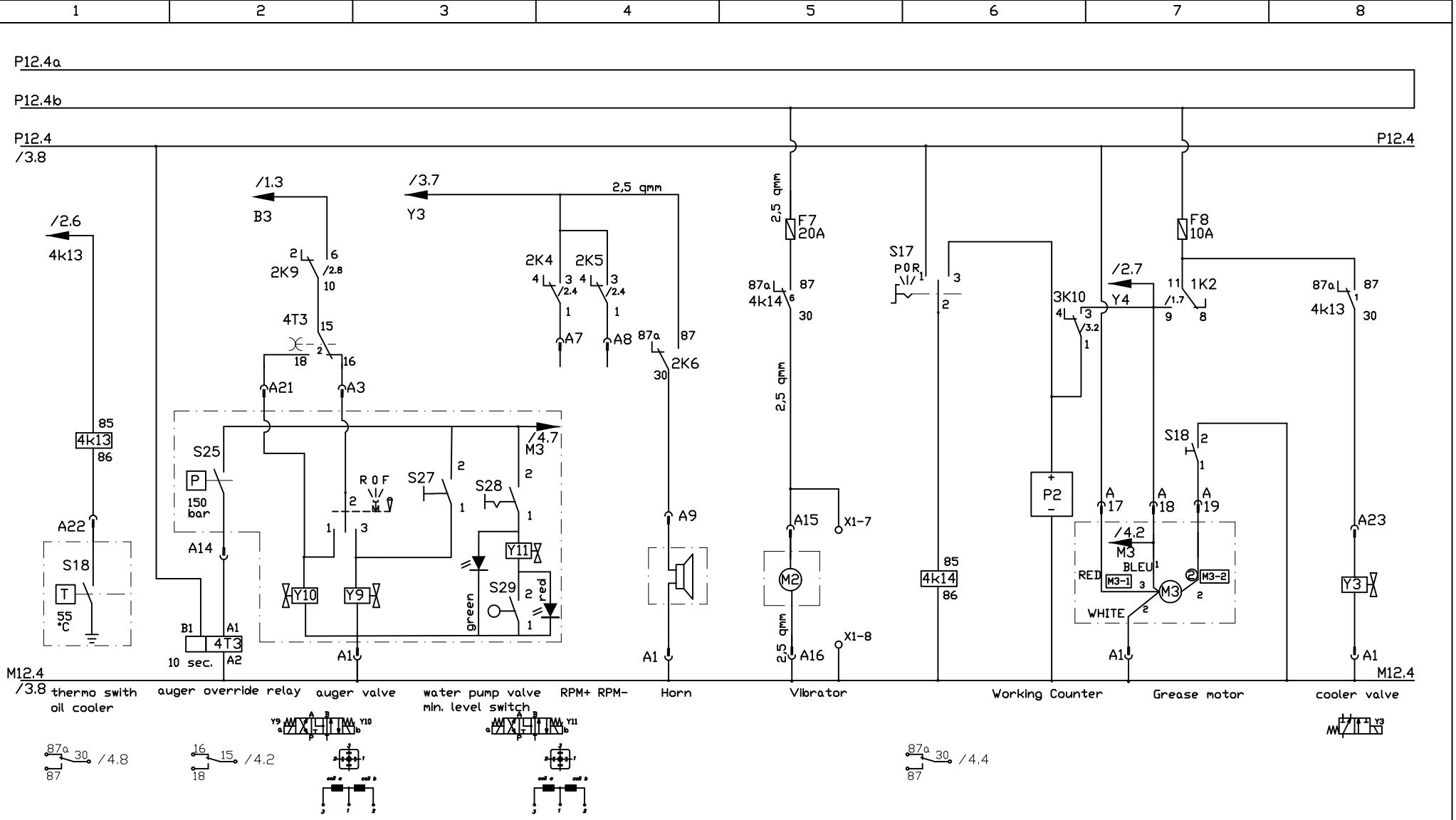

Waitzinger Baumaschinen Vertrieb und Service GmbH				FREE DIMENSION TOLERANCE DIN 7168 MEDIUM			SCALE / WEIGHT
					DATE	NAME	M 42.5 XXT
				DRAWN	2000/03/27	Fetzer	control panel V4 Page 4
				CHKD.			
				APPD.			
d	siehe B_513017.doc	19.07.05	Körner				
c	siehe B_513017.doc	24.02.05	Körner	CHANGE ONLY WITH CAD			B 51 3 017
b	siehe B_513017.doc	02.02.04	Körner				SHEET / OF
a	siehe B_513017.doc	15.01.04	Körner				
ISSUE	MODIFICATION	DATE	NAME	ORIGINAL			REPLACEMENT FOR / REPLACEMENT BY

THIS INFORMATION MAY NOT BE COPIED BY A THIRD PARTY. SUBJECT TO COPYRIGHT (PARAGRAPH 1 NO. 3 OF "URHEBERRECHTSGESETZ" FROM 14.06.1991)

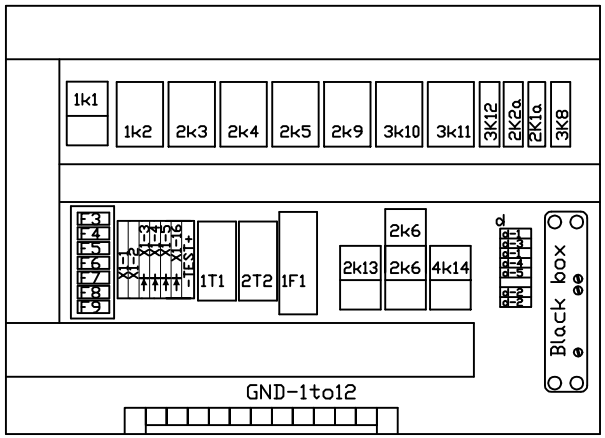

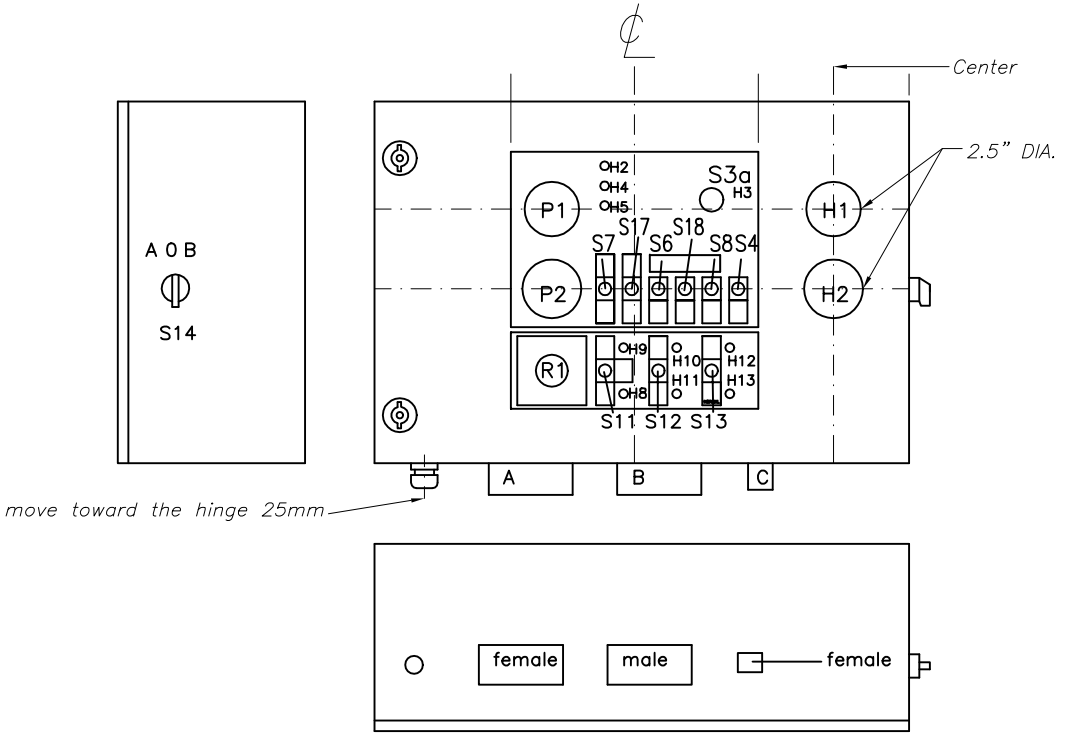

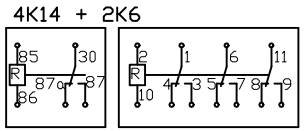

THIS INFORMATION MAY NOT BE COPIED BY A THIRD PARTY. SUBJECT TO COPYRIGHT (PARAGRAPH 1 NO. 3 OF "URHEBERRECHTSGESETZ" FROM 14.06.1991)

ISSUE	MODIFICATION	DATE	NAME
d	siehe B_513017.doc	19.07.05	Körner
c	siehe B_513017.doc	24.02.05	Körner
b	siehe B_513017.doc	02.02.04	Körner
a	siehe B_513017.doc	15.01.04	Körner

Waitzinger Baumaschinen Vertrieb und Service GmbH

FREE DIMENSION TOLERANCE DIN 7168 MEDIUM

CHANGE ONLY WITH CAD

ORIGINAL

	DATE	NAME
DRAWN	2000/03/27	Fetzer
CHKD.		
APPD.		

SCALE

WEIGHT

M 42.5 XXT

control panel V4
Page 5

B 51 3 017

SHEET

OF

REPLACEMENT FOR

REPLACEMENT BY

STÜCKLISTEN-DRUCK

Stückliste	Benennung	Anlage	Änderungsindex	gültig ab	gültig bis
B513017	SCHALTPULT WAI 106059 VERSION 4	07.02.01 Mi	c	24.02.05	

Pos	Bezeichnung Rohmaterial	Sach-Nr. Abmessung	DIN Werkstoff	Index	Gewicht Kg	Anzahl Einheit
1	Not-Stop Schalter	WAI105094				1,00 Stk
2	Kontaktblock m. Lampenfassung	WAI105095				1,00 Stk
3	Schild "emergency - stop" ZB2-BY9330	WAI102278				1,00 Stk
4	Lampe 12V-2W BA 9S	WAI104083			0,10	1,00 Stk
5	LED-Signalleuchte 12 VDC 14 mm, rot	WAI105811				4,00 Stk
6	LED-Signalleuchte 12 VDC 14 mm, gelb	WAI105812				2,00 Stk
7	LED-Signalleuchte 12 VDC 14 mm, grün	WAI105813				3,00 Stk
8	Hebelschalter - abged. MOM-OFF-MOM 2	WAI103976				1,00 Stk
9	Hebelschalter - abgedichtet ON-OFF-ON	WAI104090				2,00 Stk
10	Hebelschalter - abgedichtet MON-ON	WAI104091				2,00 Stk
11	Hebelschalter - abgedichtet ON-OFF	WAI104089				2,00 Stk
12	Hebelschalter - abgedichtet ON-ON	WAI104092			0,10	2,00 Stk
13	Relais - Industrie 3W, 12VDC	WAI104093				7,00 Stk
14	Relaissockel 11-pol. ohne Diode	WAI104859				2,00 Stk
15	Relaissockel 10A, 380V, 11 Pins	WAI100178				5,00 Stk
16	Haltebügel f. Industrierelais	WAI104094				7,00 Stk
17	Sicherungskasten	WAI101577				1,00 Stk
18	Stecksicherung 5 A	WAI101922				1,00 Stk
19	Stecksicherung 10 A	WAI101921				3,00 Stk
20	Stecksicherung 20 A	WAI104096				2,00 Stk

STÜCKLISTEN-DRUCK

Stückliste	Benennung	Anlage	Änderungsindex	gültig ab	gültig bis
B513017	SCHALTPULT WAI 106059 VERSION 4	07.02.01 Mi	c	24.02.05	

Pos	Bezeichnung Rohmaterial	Sach-Nr. Abmessung	DIN Werkstoff	Index	Gewicht Kg	Anzahl Einheit
21	Betriebsstundenzähler	WAI100900				1,00 Stk
22	Anbaugehäuse CNI 16	WAI104097				1,00 Stk
23	Steckereinsatz 1-16 pol.	WAI104022				1,00 Stk
24	Anbaugehäuse 24-pol. Gr. 8	WAI101533				1,00 Stk
25	Steckdoseneinsatz 24-pol.	WAI100710				1,00 Stk
26	Erdungsschiene für Steuerpult WAI100251	WAI102577				1,00 Stk
27	Schaltplantasche	WAI104099				1,00 Stk
28	Gummipuffer 25 x 20 2 Bolzen	WAI104100				4,00 Stk
29	Verteilersystem 4-fach MVP 12	WAI105998				1,00 Stk
30	Lampe 12V-5W	WAI104101			0,10	3,00 Stk
31	Potentiometer 100 Ohm	WAI104103				1,00 Stk
32	Potentiometer - Antrieb schwarz	WAI104104				1,00 Stk
33	Kabelverschraubung PG21	WAI104109				1,00 Stk
34	Kabelverschraubung PG11	WAI104110				1,00 Stk
35	Gegenmutter PG21	WAI104114				1,00 Stk
36	Stecker für UK 4-TG leer ST-BE	WAI106395				1,00 Stk
37	Relais 12 VDC, 1W	WAI104117				4,00 Stk
38	Relaissockel für Bosch Relais	WAI100986				4,00 Stk
39	Gegenmutter PG11	WAI104112				1,00 Stk
40	Relais - Hochl. 12VDC, 70A, 1S	WAI104122				1,00 Stk

STÜCKLISTEN-DRUCK

Stückliste	Benennung	Anlage	Änderungsindex	gültig ab	gültig bis
B513017	SCHALTPULT WAI 106059 VERSION 4	07.02.01 Mi	c	24.02.05	

Pos	Bezeichnung Rohmaterial	Sach-Nr. Abmessung	DIN Werkstoff	Index	Gewicht Kg	Anzahl Einheit
41	Relaissockel	WAI105619				1,00 Stk
42	Kabelverschraubung PG16 vernickelt	WAI102933				1,00 Stk
43	Widerstand 100 Ohm, 4,5W	WAI104118				2,00 Stk
47	Durchgangsklemme grau 2-Leiter 6qmm	WAI105817				2,00 Stk
48	Abschluß- und Zwischenplatte orange	WAI105818				1,00 Stk
49	Knebel	WAI100968				1,00 Stk
50	Halter	WAI100287				1,00 Stk
51	Schaltelement	WAI100969				3,00 Stk
52	Schalter - Brücke 3SB1S12OAN	WAI103735				2,00 Stk
53	Relais - Miniatur DC 12V 4 Wechsler	WAI105046				4,00 Stk
54	Kondensatablauf	WAI104669				1,00 Stk
55	Klemme UK 4-TG	WAI104186				7,00 Stk
56	Stecker m. Diode, ST-1N4007	WAI104185				6,00 Stk
57	Crimpkontakt - Stift 0,75 - 1 qmm	WAI103695				2,00 Stk
59	Relais - Zeit blinkend RZ12Ti-01	WAI105331				1,00 Stk
60	Relais - Ausschalt-Wisch EZ12RV-001	WAI105815				1,00 Stk
61	Not-Aus-Schaltgerät PNOZ X5	WAI105814				1,00 Stk
62	Alu-Klebeschild m. Bohr. für WAI105542	WAI105819				1,00 Stk
63	Klemme UK 5 N f. Hutschiene	WAI104671				2,00 Stk
64	Fassung 14-pol. m. Freilaufdiode	WAI103974			0,02	4,00 Stk

STÜCKLISTEN-DRUCK

Stückliste	Benennung	Anlage	Änderungsindex	gültig ab	gültig bis
B513017	SCHALTPULT WAI 106059 VERSION 4	07.02.01 Mi	c	24.02.05	

Pos	Bezeichnung Rohmaterial	Sach-Nr. Abmessung	DIN Werkstoff	Index	Gewicht Kg	Anzahl Einheit
65	Haltebügel f. Miniaturrelais	WAI104860			0,02	4,00 Stk
66	Fernthermometer 12 Volt	WAI105823				1,00 Stk
67	Black box	WAI104442				1,00 Stk
68	Gegenmutter CE16 PA 6	WAI104519				1,00 Stk
69	Leuchte innen 2JA 001 330-001	WAI106402				1,00 Stk
71	Relais - Zeit 12V, Multifunktion	WAI106393				1,00 Stk
72	Kennzeichenleuchte klein 2KA 001 389-10	WAI106182				1,00 Stk

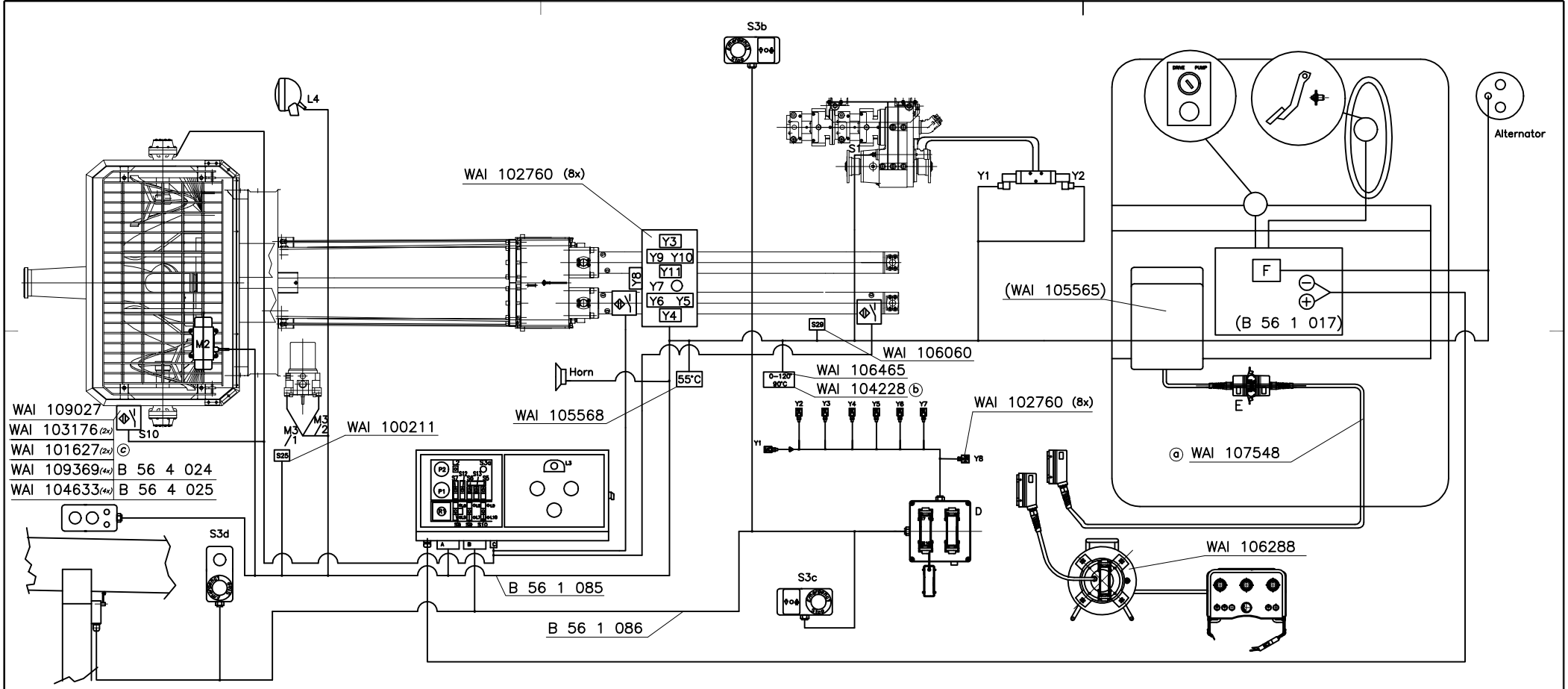

PLUG A

1	Y3+L4+M3/1+ Y4+Y7+FAN	brn
2	S1>F1	blk/whi
3	Y3−1	red/yel
4	temp. switch	yel/whi
5	L4	grn/whi
6	Y4−1	blu/whi
7	F3	blu
8	F2	blk
9	Horn	blk
10	Y5−1/hopper Y6/Y8/Y9	blk/grn
11	Y5− 2	blk/red
12	Y7	gry/red
13	Y8	whi/brn
14	Y9	vio
15	M2	blk
16	M2	blu
17	M3/1 −1	gry
18	M3/1−3	grn
19	M3/2 −2	yel
20	Y6	whi
21	temp switch	whi
22	temp switch	whi
23	Y10	grn
24	free	free
	F5	red
	F6	gry/blk

PLUG B

1	D10−|||	brn	ground
2	S3b	gry	emergency stop
3	S3c	blk	emergency stop
4	D13	blu	emergency stop
5	D 22	gry/red	emergency stop
6	S3b−d	white	emergency stop
7	D 20	whi/grn	horn
8	D 15	grn	RPM +
9	D 16	blk/whi	RPM −
10	D 24	vio	Pot
11	D 17	blk/grn	pumping on
12	D 19	gry/blk	reverse
13	free	free	free
14	D 18	blu/whi	pumping
15	D 21	blk/red	flashing light
16	free	free	free

PLUG C

pin No.	wire No.	function
1	brown	+
2	blue	−
3	black	Sensor 1
4	black	Sensor 2
5		
6		
7		
8		

PLUG D

⏚	A 1	brn	ground
1	Y3/3	brn/whi	boom 1 up
2	Y3/2	blu	boom 1 down
3	Y4/3	grn/whi	boom 2 up
4	Y4/2	blk/grn	boom 2 down
5	Y5/3	gry/blk	boom 3 up
6	Y5/2	blk/whi	boom 3 down
7	Y6/3	blk/red	boom 4 up
8	Y6/2	gry/red	boom 4 down
9	free	free	free
10	−|||	brn	ground
11	Y2/2	vio	turn clockwise
12	Y2/3	blu/whi	turn anticlockw.
13	B4	red	plus
14	Y1/2/3 Y7	gry	pilot valve
15	B 8	grn	RPM +
16	B 9	blk/whi	RPM −
17	B 11	blk/grn	pumping on
18	B 14	blu/whi	pumping
19	B 12	gry/blk	reverse
20	B 7	whi/grn	horn
21	B 15	blk/red	free
22	B 5	gry/red	emergency stop
23	Y7	brn/whi	free
24	B 10	vio	POT

PLUG E

pin No.	wire No.	function	pin No.	wire No.	function
1	1	power supply 12V	17	34	boom 4 up
2	3	emergency stop	18	31	boom 3 down
3	4	12 V+	19	32	boom 3 up
4	5	RPM−	20	29	turn clockwise
5	6	free	21	30	turn anticlockw.
6	8	horn	22	28	boom 1 down
7	11	RPM+	23	27	boom 1 up
8	13	pump on	24	39	boom 2 down
9	9	GND	25	40	boom 2 up
10	14	reverse	26	–	free
11	25	pilot valve	27	–	free
12	–	free	28	35	pump speed pot
13	–	free	29	–	free
14	–	free	30	–	free
15	–	free	31	–	free
16	33	boom 4 down	32	–	free

TERMINAL F

blk/whi	A2
whi	S1
grn	Y1
gry/whi	Y2
blu	A7
blk	A8
vio	Lima D
brn	⊖
red	reserve
gry/blk	reserve

THIS INFORMATION MAY NOT BE COPIED BY A THIRD PARTY. SUBJECT TO COPYRIGHT (PARAGRAPH 1 NO. 3 OF "URHEBERRECHTSGESETZE" FROM 14.06.1991)

Waitzinger Baumaschinen Vertrieb und Service GmbH

FREE DIMENSION TOLERANCE DIN 7168 MEDIUM

SCALE without | WEIGHT

own parts list

	DATE	NAME
DRAWN	2003/06/30	MI
CHKD.		
APPD.		

c	siehe B_561084.doc	07.11.05	Körner	CHANGE ONLY WITH CAD
b	siehe B_561084.doc	29.08.05	Körner	
a	siehe B_561084.doc	23.07.04	Körner	
	MODIFICATION	DATE	NAME	ORIGINAL

Cable harness / accessories REED 42XXT

B 56 1 084

SHEET | OF

REPLACEMENT FOR | REPLACEMENT BY

PARTS LIST

16.11.05 10:22:09

part list	description	created	index	valid from	valid to
B561084	cable harness closed loop 42XXT	30.06.03 Mi	c	07.11.05	

pos	description stock	ident-no dimensions	DIN material	index	weigth Kg	quantity unit
1	cable harness pump REED CL 42XXT own parts list	B561085				1,00 Stk
2	cable harness boom REED 42XXT own parts list	B561086		c 09.11.05		1,00 Stk
3	cable for remote control own parts list	WAI107548		a 23.07.04		1,00 Stk
4	cable drum + 35m cable (34 x 0,5) own parts list	WAI106288				1,00 Stk
5	anti-interference device	WAI102760				16,00 Stk
6	thermo sensor	WAI104228				1,00 Stk
7	thermo sensor 55 degrees C	WAI105568			0,10	1,00 Stk
8	pressure switch	WAI100211			0,87	1,00 Stk
9	switch swimmer	WAI106060				1,00 Stk
10	sealing ring 14x18x2	WAI106465				1,00 Stk
11	switch	WAI109027				1,00 Stk
12	countersunk screw	WAI103176				2,00 Stk
13	washer 6.4	WAI101627				2,00 Stk
14	cheese head screw M 4 x 30	WAI109369				4,00 Stk
15	washer 4	WAI104633				4,00 Stk
16	plate	B564024 Bl 6x45x80	1543/EN10029 S235J2G3		0,16	1,00 Stk
17	plate	B564025 Bl 3x180x183	1543/EN10029 S235J2G3		0,16	1,00 Stk

Lose Teile:

Pos. 34 Kabelbinder 32 Stück

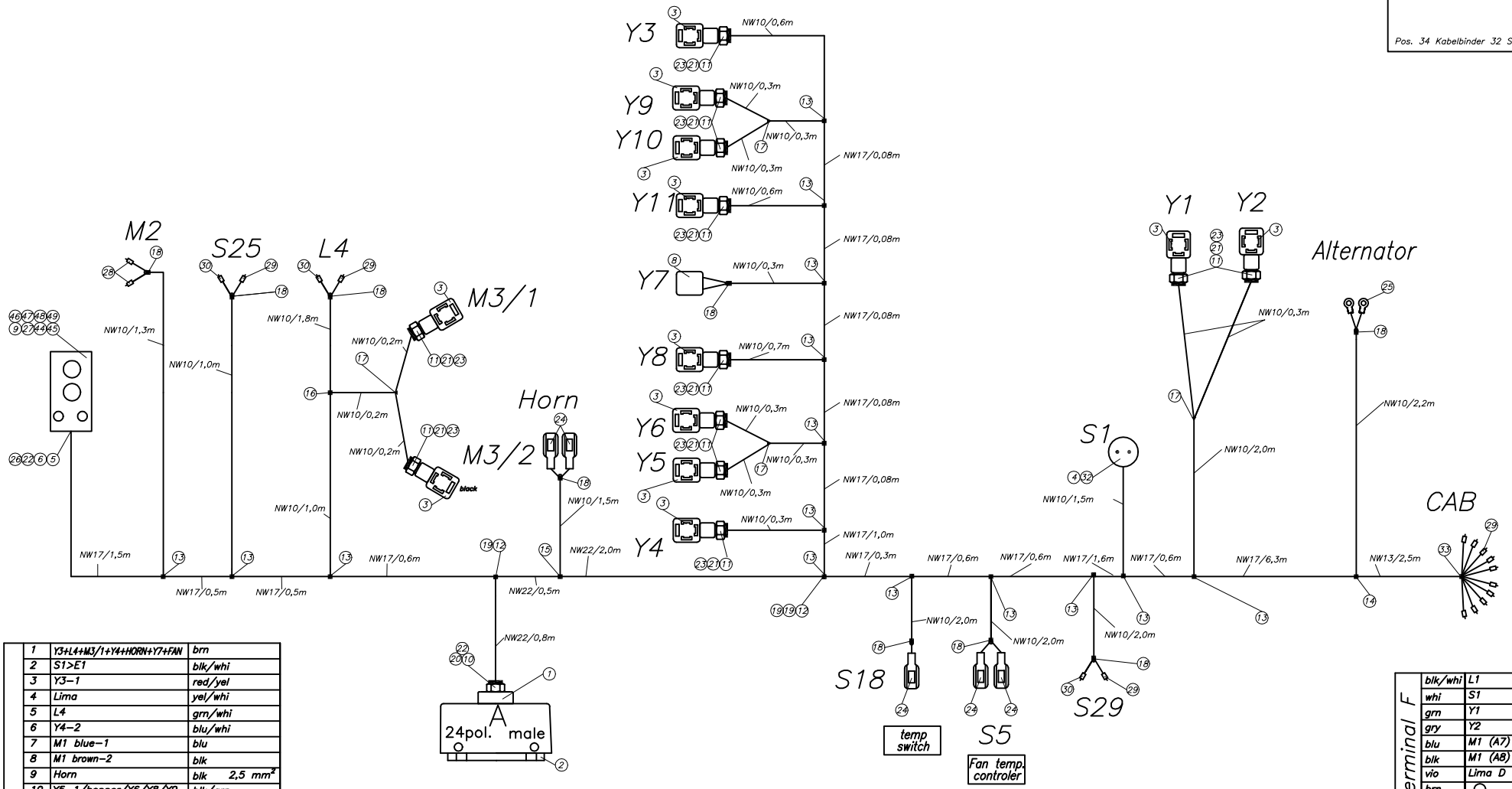

PLUG A			
	1	Y3+L4+M3/1+Y4+HORN+Y7+FAN	brn
	2	S1>E1	blk/whi
	3	Y3–1	red/yel
	4	Lima	yel/whi
	5	L4	grn/whi
	6	Y4–2	blu/whi
	7	M1 blue–1	blu
	8	M1 brown–2	blk
	9	Horn	blk 2,5 mm²
	10	Y5–1/hopper/Y6/Y8/Y9	blk/grn
	11	Y5–2	blk/red
	12	Y7	gry/red
	13	Y8	whi/brn
	14	Y9	vio
	15	M2	blk 2,5 mm²
	16	M2	blu 2,5 mm²
	17	M3/1 –1	gry
	18	M3/1–3	grn
	19	M3/2 –2	yel
	20	Y6	whi
	21		
	22		
	23	Fan	grn
	24	S5	yel/whi
		Res. F	red
		Res. F	gry/blk

Terminal F		
	blk/whi	L1
	whi	S1
	grn	Y1
	gry	Y2
	blu	M1 (A7)
	blk	M1 (A8)
	vio	Lima D
	brn	⊖
	red	reserve
	gry/blk	reserve

this information may not be copied by a third parts. Subject to copyright (paragraph 1 no. 3 of (Urheberrechtsgesetz" from 14.06.1991)

Waitzinger Baumaschinen Vertrieb und Service GmbH

free dimension tolerance DIN 7168 medium

		date	name
drawn		2003/06/30	Mi
chkd.			
appd.			

change only with CAD

issue	MODIFICATION	date	name
original			

scale | weight

own parts list

cable loop pump REED cl 42XXT

B 56 1 085

sheet 1 of 2

replacement for | replacement by

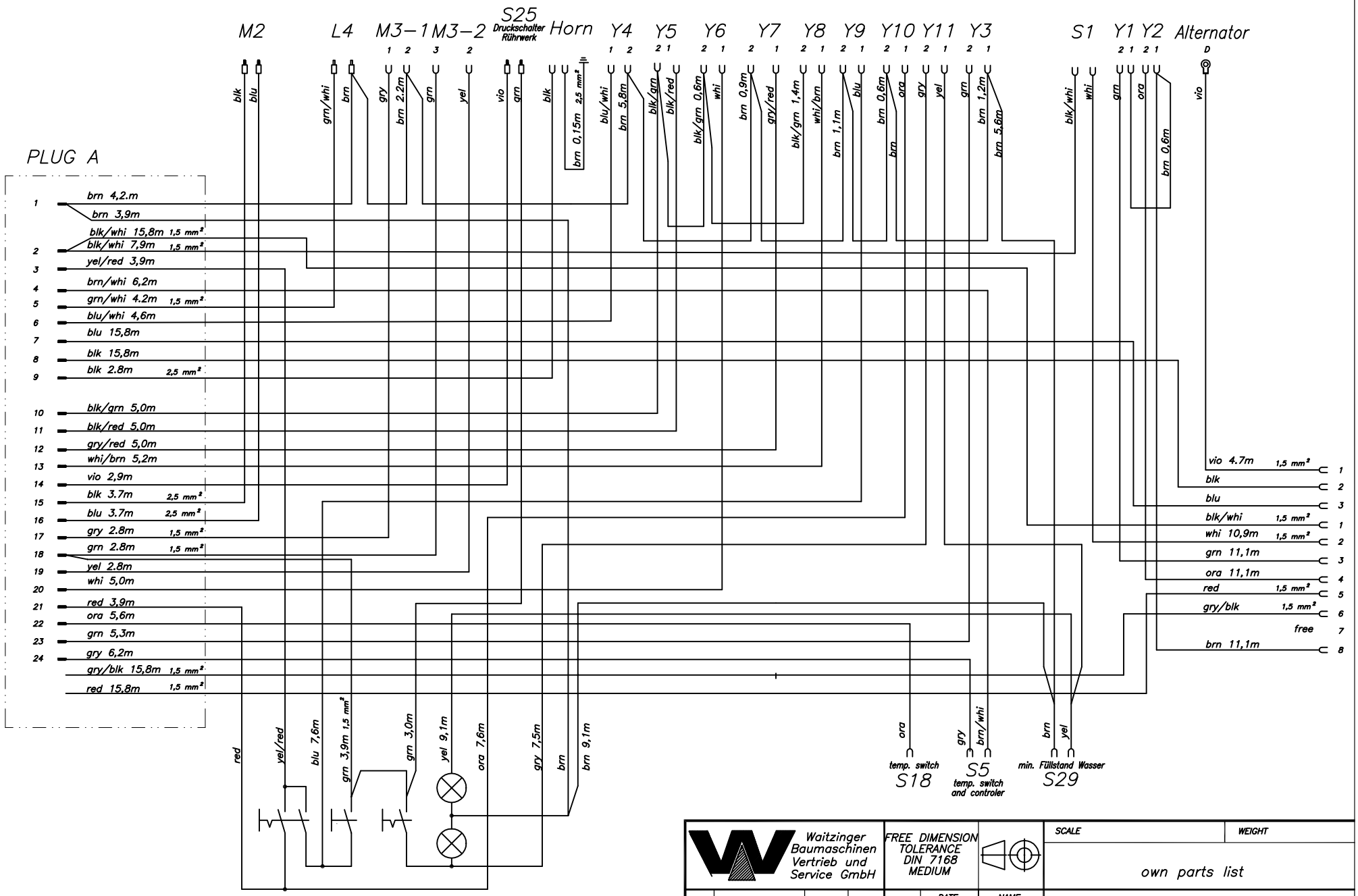

Alle nicht bezeichneten Kabel sind 1mm²
Kabel um 10% länger als angegeben zuschneiden

THIS INFORMATION MAY NOT BE COPIED BY A THIRD PARTY. SUBJECT TO COPYRIGHT (PARAGRAPH 1 NO. 3 OF "URHEBERRECHTSGESETZ" FROM 14.06.1991)

Waitzinger Baumaschinen Vertrieb und Service GmbH

FREE DIMENSION TOLERANCE DIN 7168 MEDIUM

	DATE	NAME
DRAWN	2003/06/30	Fetzer
CHKD.		
APPD.		

CHANGE ONLY WITH CAD

ORIGINAL

ISSUE	MODIFICATION	DATE	NAME

SCALE

WEIGHT

own parts list

cable loop pump REED cl 42XXT

B 56 1 085

SHEET 2 OF 2

REPLACEMENT FOR

REPLACEMENT BY

PARTS LIST

part list	description	created	index	valid from	valid to
B561085	cable harness pump REED CL 42XXT	30.06.03 Mi			

pos	description stock	ident-no dimensions	DIN material	index	weigth Kg	quantity unit
1	housing upper part, 24-pol	WAI101542				1,00 Stk
2	plug insertion 24-pol.	WAI100714				1,00 Stk
3	plug	WAI104691				12,00 Stk
4	coupling	WAI104523				1,00 Stk
5	fitting PG16	WAI104510				1,00 Stk
6	sealing for cable fitting PG16	WAI104696				1,00 Stk
7	plate	WAI104735				12,00 Stk
8	plug 2-poles, AMP junior timer	WAI106058				1,00 Stk
9	housing agitator own parts list	B561072				1,00 Stk
10	fitting PG21	WAI104507				1,00 Stk
11	fitting PG9	WAI104506				12,00 Stk
12	t - piece 22-22-22	WAI104515				2,00 Stk
13	t - piece 17-10-17	WAI104332				14,00 Stk
14	t - piece	WAI104511				1,00 Stk
15	t - piece 22-10-22	WAI105263				1,00 Stk
16	t - piece 10-10-10	WAI104514				1,00 Stk
17	y - piece	WAI104539				4,00 Stk
18	cap	WAI104513				9,00 Stk
19	reducer 22/17	WAI104509				3,00 Stk
20	sealing for cable fitting PG21	WAI104697				1,00 Stk

PARTS LIST

part list	description	created	index	valid from	valid to
B561085	cable harness pump REED CL 42XXT	30.06.03 Mi			

pos	description stock	ident-no dimensions	DIN material	index	weigth Kg	quantity unit
21	sealing for cable fitting PG9	WAI104695				12,00 Stk
22	O-ring 15 x 1,5	WAI104701				2,00 Stk
23	O-ring 8.9 x 1.25	WAI104700				12,00 Stk
24	flat plug sleeve 2,5mm	WAI104785				15,00 Stk
25	thimble 2,5 qmm M6	WAI104693			0,02	5,00 Stk
26	nut CE 16	WAI104519				1,00 Stk
27	push button	WAI100569				1,00 Stk
28	cove end sleeve 2.5mm	WAI101997				4,00 Stk
29	cove end sleeve 1.5mm	WAI101996				36,00 Stk
30	cove end sleeve 1.5mm	WAI104692				6,00 Stk
31	shrink hose	WAI104677				0,10 Mtr
32	shrink hose	WAI104505				0,05 Mtr
33	cable tie 200x3.6, black	WAI103137				32,00 Stk
40	cable pipe	WAI104520				3,30 Mtr
41	cable pipe	WAI104216				10,50 Mtr
42	cable pipe	WAI104215				2,50 Mtr
43	cable pipe	WAI104213				23,80 Mtr
44	sign AL agitator	WAI106030				1,00 Stk
45	sign AL water pump	WAI106031				1,00 Stk
46	lever switch ON-OFF-ON	WAI104090				1,00 Stk

PARTS LIST

part list	description	created	index	valid from	valid to
B561085	cable harness pump REED CL 42XXT	30.06.03 Mi			

pos	description stock	ident-no dimensions	DIN material	index	weigth Kg	quantity unit
47	lever switch ON-OFF	WAI104089				1,00 Stk
48	led-signal lamp, red	WAI105811				1,00 Stk
49	led-signal lamp, green	WAI105813				1,00 Stk
50	cable	WAI108059				350,00 Mtr

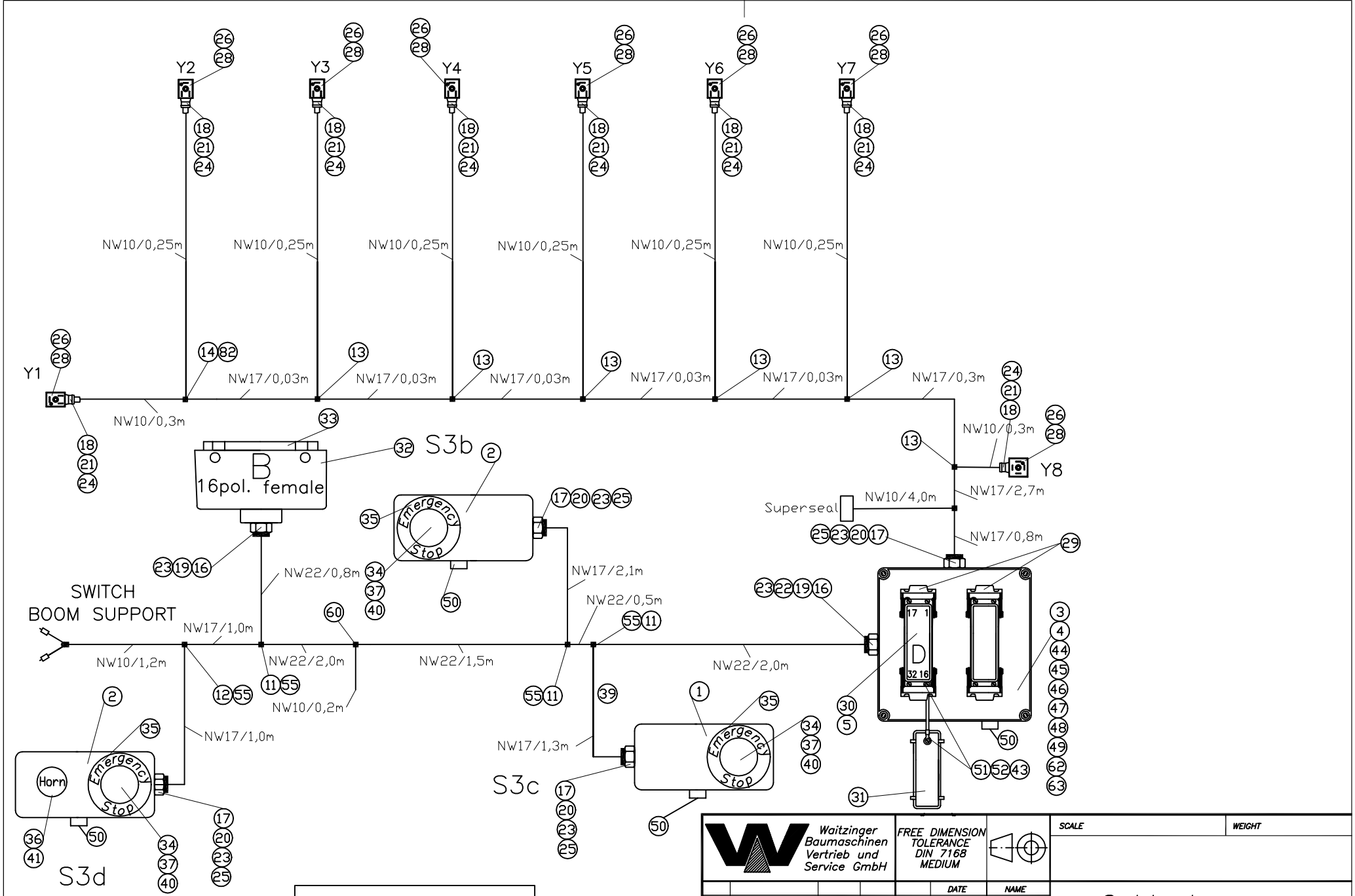

Lose Teile:
Pos. 59 Kabelbinder 10 Stück

THIS INFORMATION MAY NOT BE COPIED BY A THIRD PARTY. SUBJECT TO COPYRIGHT (PARAGRAPH 1 NO. 3 OF "URHEBERRECHTSGESETZ" FROM 14.06.1991)

ISSUE	MODIFICATION	DATE	NAME
c	siehe b_561086.doc	09.11.05	Körner
b	siehe b_561086.doc	02.06.05	Körner
a	siehe b_561086.doc	02.02.04	Körner

Waitzinger Baumaschinen Vertrieb und Service GmbH

FREE DIMENSION TOLERANCE DIN 7168 MEDIUM

	DATE	NAME
DRAWN	2003/06/30	Mi
CHKD.		
APPD.		

CHANGE ONLY WITH CAD

ORIGINAL

SCALE

WEIGHT

Cable harness boom REED 42XXT

B 56 1 086

SHEET 1 OF 3

REPLACEMENT FOR

REPLACEMENT BY

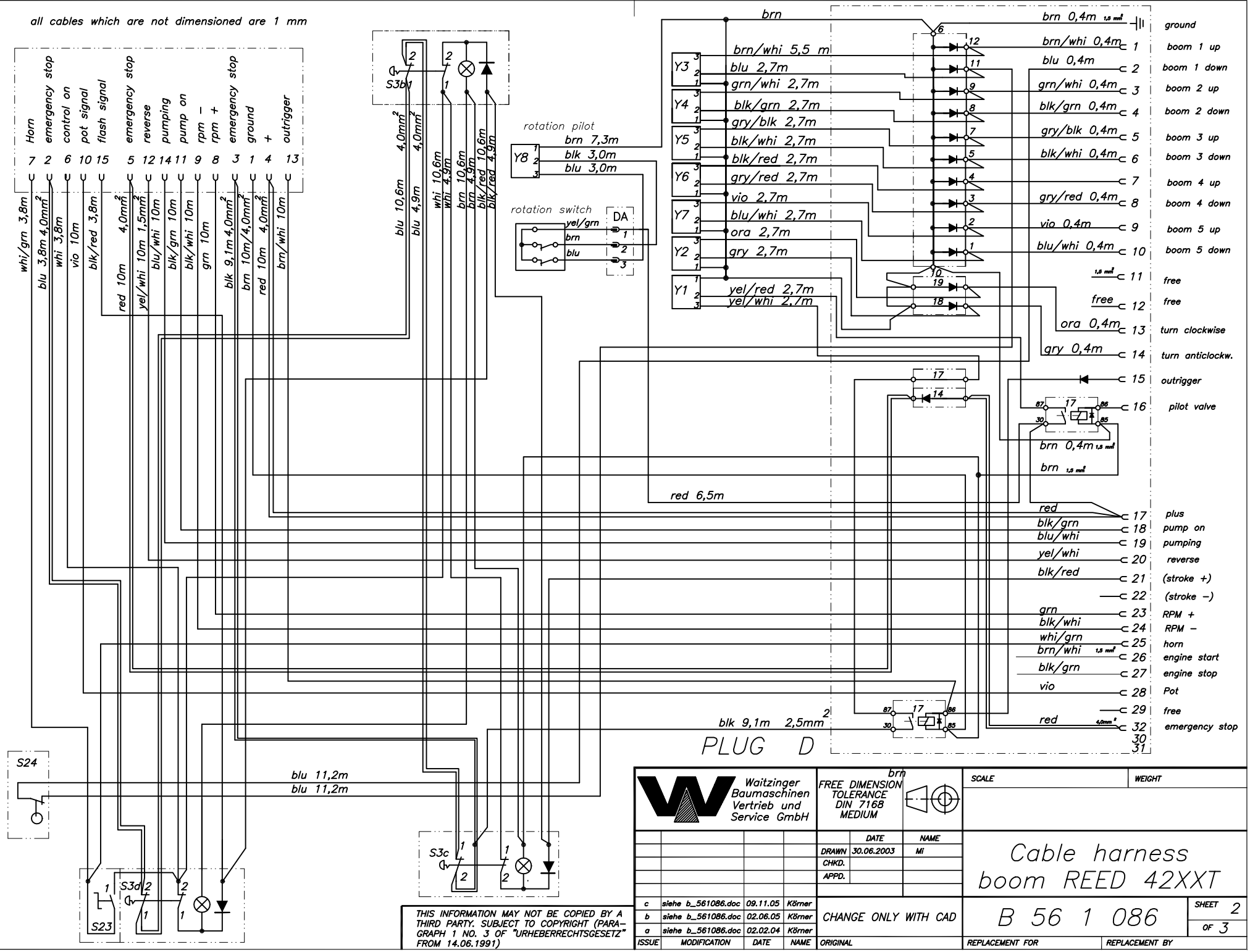

Waitzinger Baumaschinen Vertrieb und Service GmbH	FREE DIMENSION TOLERANCE DIN 7168 MEDIUM	brn	SCALE / WEIGHT

	DATE	NAME
DRAWN	30.06.2003	Mi
CHKD.		
APPD.		

Cable harness boom REED 42XXT

B 56 1 086

SHEET 2 OF 3

ISSUE	MODIFICATION	DATE	NAME
c	siehe b_561086.doc	09.11.05	Körner
b	siehe b_561086.doc	02.06.05	Körner
a	siehe b_561086.doc	02.02.04	Körner

CHANGE ONLY WITH CAD

ORIGINAL

REPLACEMENT FOR

REPLACEMENT BY

THIS INFORMATION MAY NOT BE COPIED BY A THIRD PARTY. SUBJECT TO COPYRIGHT (PARAGRAPH 1 NO. 3 OF "URHEBERRECHTSGESETZ" FROM 14.06.1991)

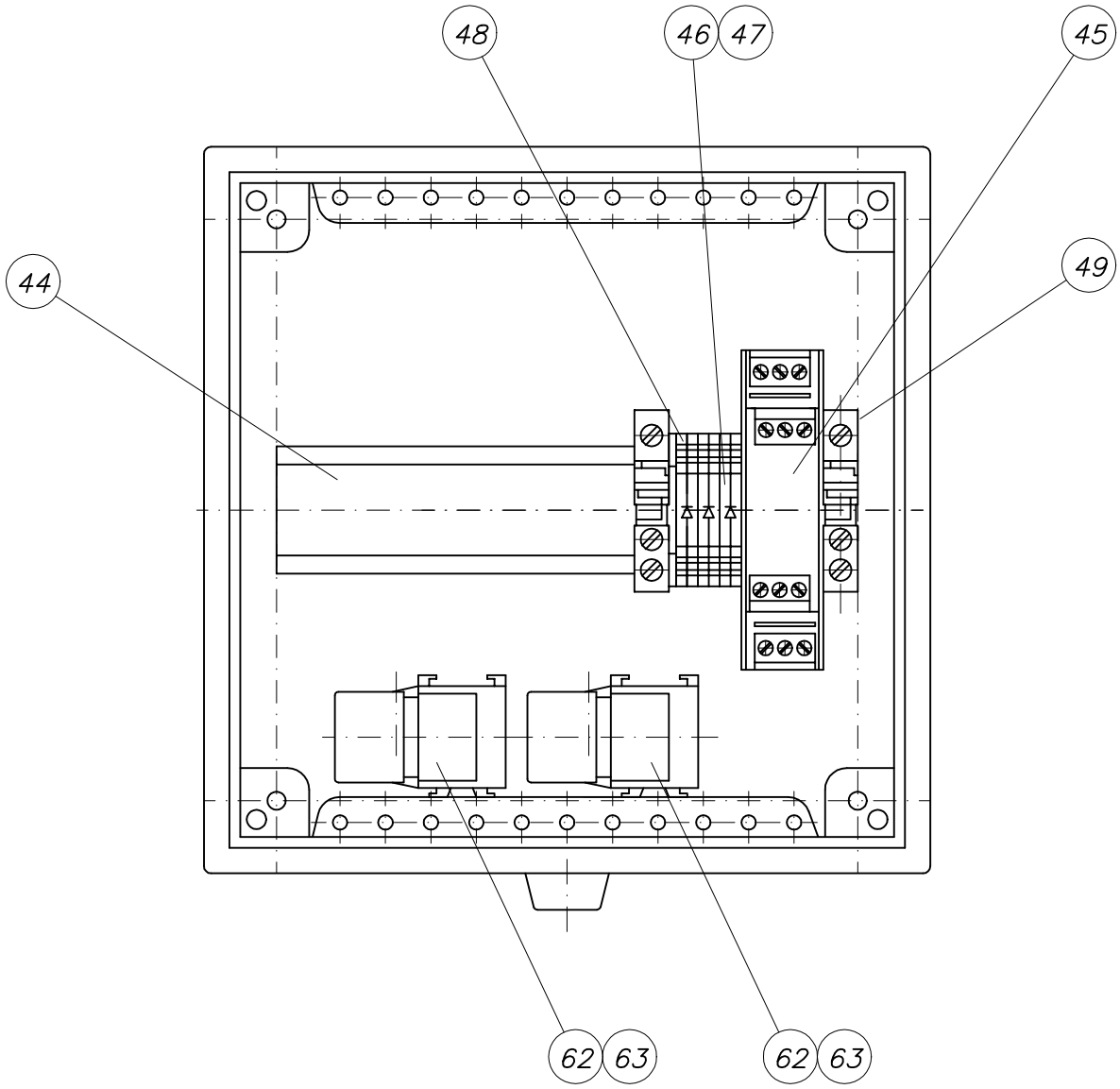

THIS INFORMATION MAY NOT BE COPIED BY A THIRD PARTY. SUBJECT TO COPYRIGHT (PARAGRAPH 1 NO. 3 OF "URHEBERRECHTSGESETZ" FROM 14.06.1991)

Waitzinger Baumaschinen Vertrieb und Service GmbH

FREE DIMENSION TOLERANCE DIN 7168 MEDIUM

	DATE	NAME
DRAWN	2003/06/30	Mi
CHKD.		
APPD.		

SCALE | WEIGHT

Cable harness boom REED 42XXT

B 56 1 086

SHEET 3 OF 3

ISSUE	MODIFICATION	DATE	NAME
c	siehe B_561086.doc	09.11.05	Körner
b	siehe B_561086.doc	02.06.05	Körner
a	siehe B_561086.doc	02.02.04	Körner

CHANGE ONLY WITH CAD

ORIGINAL | REPLACEMENT FOR | REPLACEMENT BY

PARTS LIST

16.11.05 10:23:39

part list	description	created	index	valid from	valid to
B561086	cable harness boom REED 42XXT	30.06.03 Mi	c	09.11.05	

pos	description stock	ident-no dimensions	DIN material	index	weigth Kg	quantity unit
1	housing right own parts list	B561068		a 20.01.04		1,00 Stk
2	housing left own parts list	B561043		a 25.02.02		2,00 Stk
3	Clamp box for boom own parts list	B561083		a 16.05.03		1,00 Stk
4	clamp	WAI104671				2,00 Stk
5	plugbox insert 17-32 pol.	WAI102157				1,00 Stk
11	t - piece 22-22-22	WAI104515				3,00 Stk
12	t - piece	WAI104508				1,00 Stk
13	t - piece 17-10-17	WAI104332				5,00 Stk
14	t - piece	WAI104511				1,00 Stk
16	fitting PG21	WAI104507				2,00 Stk
17	fitting PG16	WAI104510				4,00 Stk
18	fitting PG9	WAI104506				8,00 Stk
19	sealing for cable fitting PG21	WAI104697				2,00 Stk
20	sealing for cable fitting PG16	WAI104696				4,00 Stk
21	sealing for cable fitting PG9	WAI104695				8,00 Stk
22	lock nut PG21	WAI104114				1,00 Stk
23	O-ring 15 x 1,5	WAI104701				6,00 Stk
24	O-ring 8.9 x 1.25	WAI104700				8,00 Stk
25	nut CE 16	WAI104519				4,00 Stk
26	plate	WAI104735				8,00 Stk

PARTS LIST

part list	description	created	index	valid from	valid to
B561086	cable harness boom REED 42XXT	30.06.03 Mi	c	09.11.05	

pos	description stock	ident-no dimensions	DIN material	index	weigth Kg	quantity unit
28	plug	WAI104691				8,00 Stk
29	housing-body, lower part	WAI107232				2,00 Stk
30	plugbox insert 1-16 pol.	WAI102593				1,00 Stk
31	protective cap	WAI107231				1,00 Stk
32	housing upper part 16-pol.	WAI104023				1,00 Stk
33	plugbox insert 1-16 pol.	WAI104121				1,00 Stk
34	emergency stop switch	WAI109803				3,00 Stk
35	label ZB2-BY9330	WAI102278				3,00 Stk
36	push button	WAI100569				3,00 Stk
37	contact block	WAI109804				3,00 Stk
38	sign plate for outrigger	WAI104770				1,00 Stk
39	sign plate for outrigger + key switch	WAI104771				1,00 Stk
40	led-signal lamp, red 12V	WAI109906				3,00 Stk
41	plate "horn"	WAI105415				1,00 Stk
42	diode, 1A	WAI105337				3,00 Stk
43	washer 4	WAI104633				9,00 Stk
44	rail	WAI104772				0,20 Mtr
45	diode, MKS-D10	WAI104541				1,00 Stk
46	clamp	WAI104186				3,00 Stk
47	plug with diode	WAI104185				3,00 Stk

PARTS LIST

part list	description	created	index	valid from	valid to
B561086	cable harness boom REED 42XXT	30.06.03 Mi	c	09.11.05	

pos	description stock	ident-no dimensions	DIN material	index	weigth Kg	quantity unit
48	end plate	WAI104833				1,00 Stk
49	clamp	WAI104672				2,00 Stk
50	condenser	WAI104669				4,00 Stk
51	hexagon bolt M 4 x 12	WAI104632				9,00 Stk
52	hex. nut M4	WAI104634				9,00 Stk
53	cove end sleeve 1.5mm	WAI101996				60,00 Stk
54	cove end sleeve 1.5mm	WAI104692				35,00 Stk
55	reducer 22/17	WAI104509				4,00 Stk
56	cable pipe	WAI104520				7,00 Mtr
57	cable pipe	WAI104216				8,80 Mtr
58	cable pipe	WAI104213				3,40 Mtr
59	cable tie 200x3.6, black	WAI103137				28,00 Stk
60	t - piece 22-10-22	WAI105263				1,00 Stk
62	relay socket	WAI100986				2,00 Stk
63	relay DC 12V, 30 A	WAI104845				2,00 Stk
64	reel band	WAI104832				1,00 Mtr
81	flat plug sleeve 2,5mm	WAI104785				14,00 Stk
82	reducer	WAI104512				1,00 Stk
90	thimble 1,5 - 2,5 qmm	WAI102458				3,00 Stk
91	cove end sleeve 2.5mm	WAI101997				20,00 Stk

PARTS LIST

16.11.05 10:23:39

part list	description	created	index	valid from	valid to
B561086	cable harness boom REED 42XXT	30.06.03 Mi	c	09.11.05	

pos	description stock	ident-no dimensions	DIN material	index	weigth Kg	quantity unit
92	cove end sleeve 1.0mm	WAI101995				20,00 Stk
93	plate	WAI106435				10,00 Stk
94	cable	WAI108059				350,00 Mtr

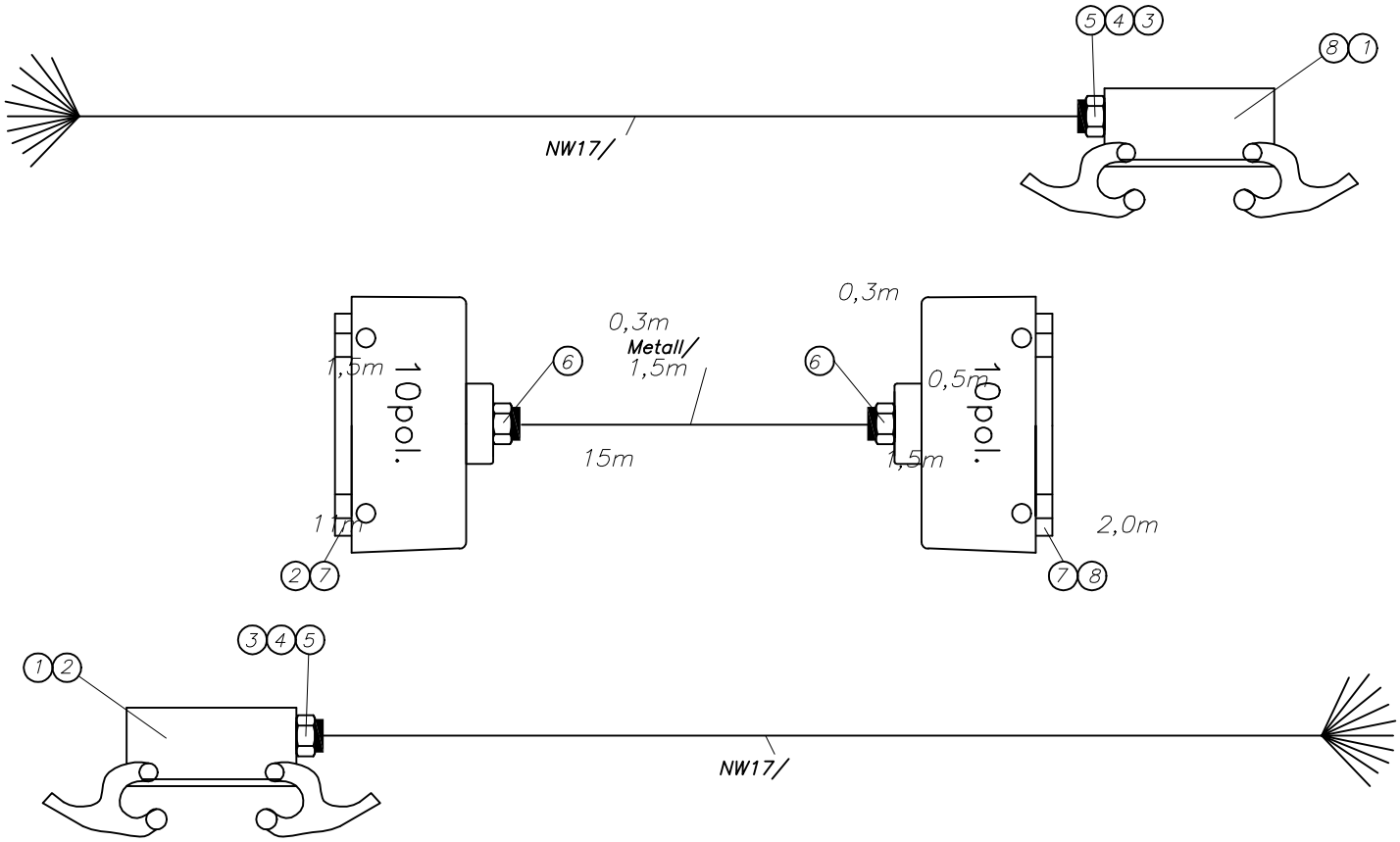

Waitzinger Baumaschinen Vertrieb und Service GmbH				Freimaßtoleranz DIN 7168 mittel		Maßstab	Gewicht
						eigene Stückliste	
					Datum / Name		
				Bearb.	06.09.2004 Körner	Kabelbaum Mast 37m REED	
				Gepr.			
				Norm			
				Änderung nur auf CAD		B 56 2 066	Blatt 2 von 2 Bl.
Zust.	Änderung	Datum	Name	Urspr.		Ers. für	Ers. durch

Ohne unsere Genehmigung darf diese Zeichnung weder vervielfältigt noch dritten Personen oder Konkurrenzfirmen mitgeteilt werden.(Paragraph 1 Nr.3 des Urheberrechtsgesetzes vom 14.06.1901)

PARTS LIST

28.09.05 10:36:06

part list	description	created	index	valid from	valid to
b562066	cable loop boom REED	06.10.04 ALEXAND			

pos	description stock	ident-no dimensions	DIN material	index	weigth Kg	quantity unit
1	housing 10 poles	WAI106688				2,00 Stk
2	plug insert 1-10 pin	WAI106687				2,00 Stk
3	fitting PG16	WAI104510				2,00 Stk
4	sealing for cable fitting PG16	WAI104696				2,00 Stk
5	O-ring 15 x 1,5	WAI104701				2,00 Stk
6	reduc. ring PG16 - 13,5	WAI107524				2,00 Stk
7	coupling housing 10-pole	WAI106689				2,00 Stk
8	plugbox insert 1-10 pol.	WAI106686				2,00 Stk
21	cable pipe	WAI104216				25,50 Mtr
22	cable	WAI108059				280,00 Mtr

Drehwerksabschaltung
switch limit advice

B 57 0 015a

Waitzinger
Baumaschinen GmbH

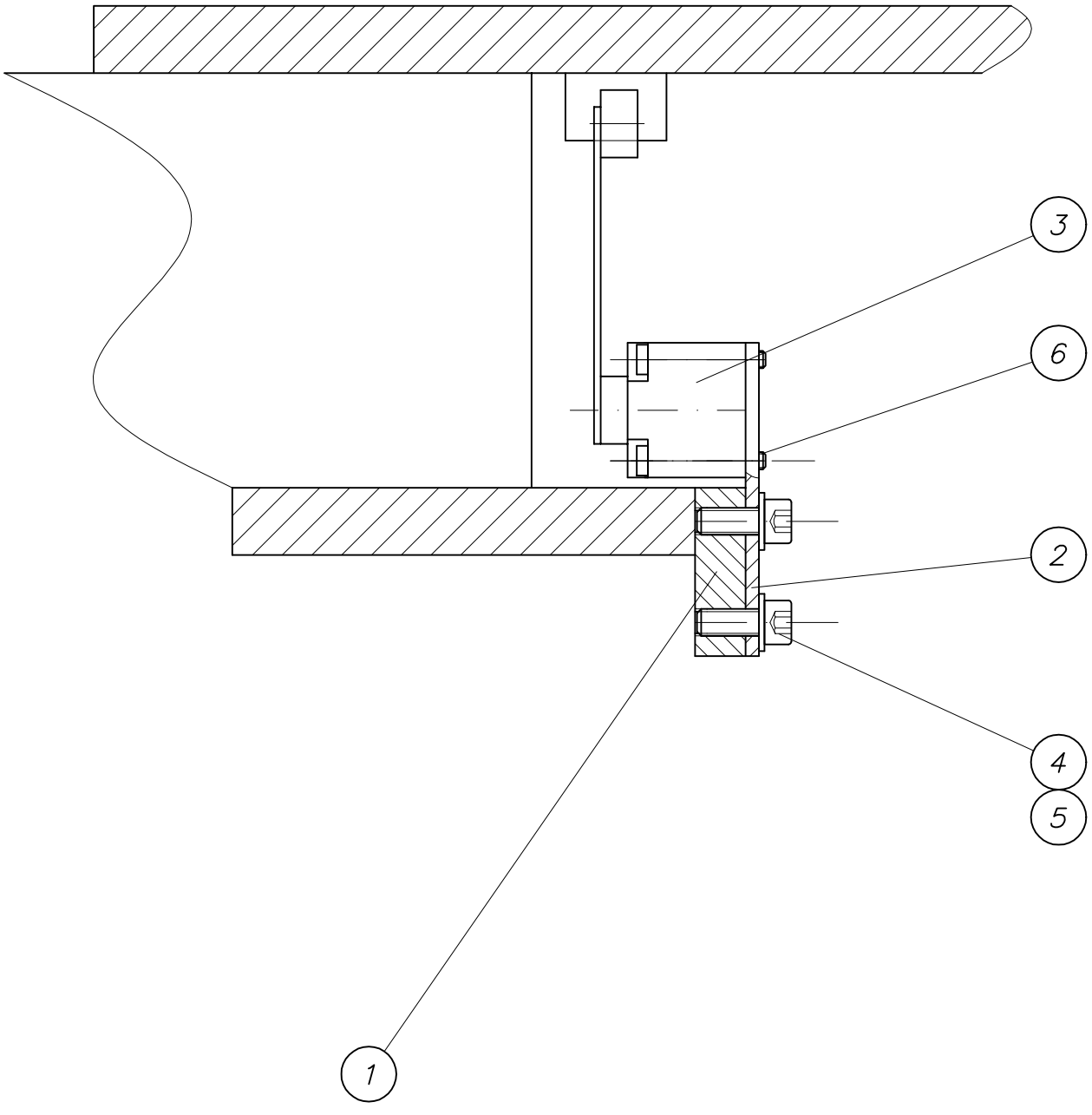

PARTS LIST

11.07.05 09:46:15

part list	description	created	index	valid from	valid to
B570015	turning stop unit	04.03.03 Mi	a	16.02.05	

pos	description stock	ident-no dimensions	DIN material	index	weigth Kg	quantity unit
1	plate	B570016 Bl 15x50x60	1543/EN10029 S235J2G3		0,30	1,00 Stk
2	plate	B570017 Bl 4x75x93	1543/EN10029 S235J2G3		0,20	1,00 Stk
3	position switch own parts list	WAI107186				1,00 Stk
4	cheese head screw M 8 x 20	WAI103273				4,00 Stk
5	washer 8.4	WAI101625				4,00 Stk
6	cheese head screw M5x35	WAI109456				4,00 Stk

Übersicht B 60 - B 69

over view B 60 - B 69

Waitzinger
Baumaschinen GmbH

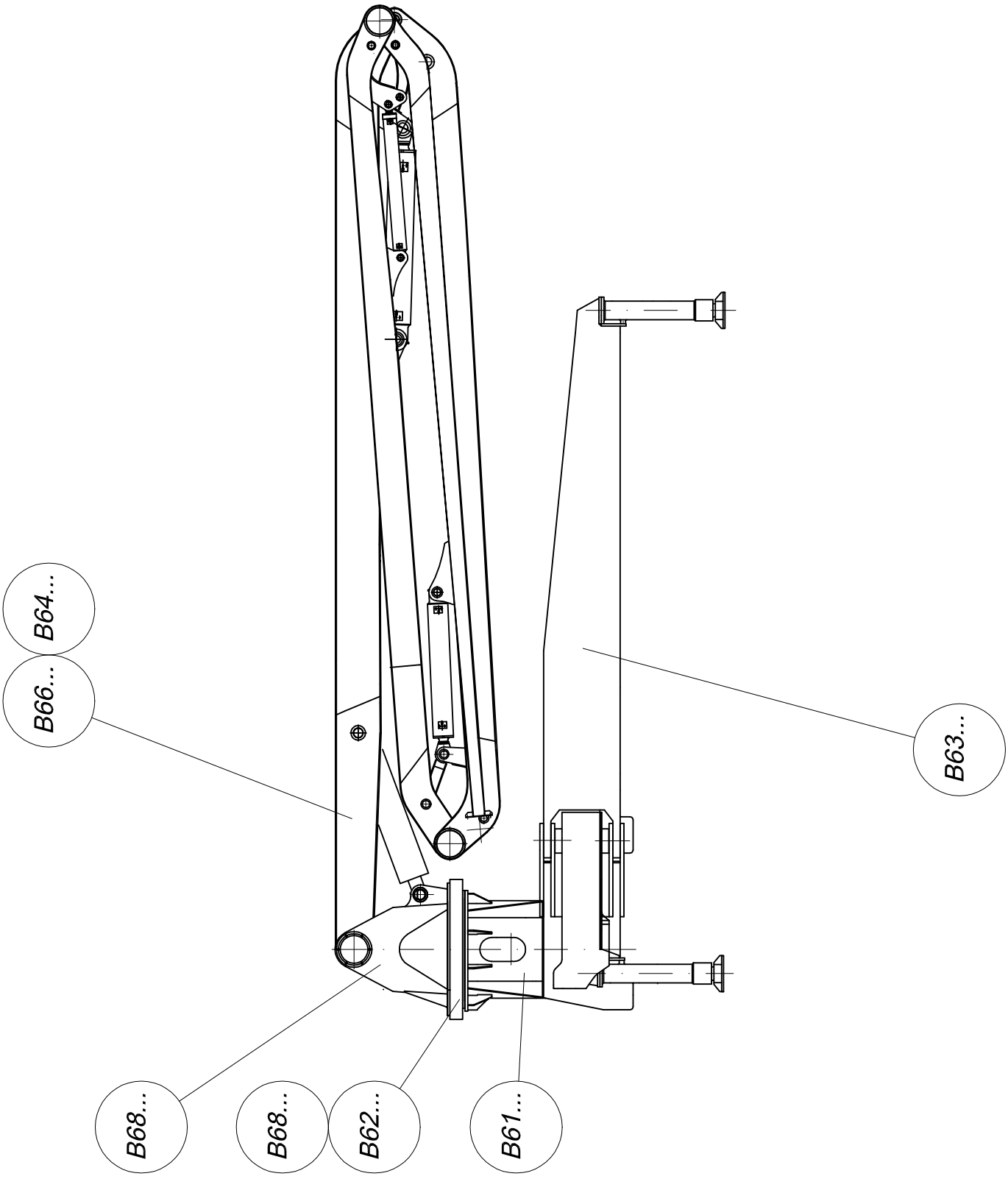

23.07.2002

Mastbock kpl.

boom base cpl.

B 61 2 205d

Waitzinger
Baumaschinen GmbH

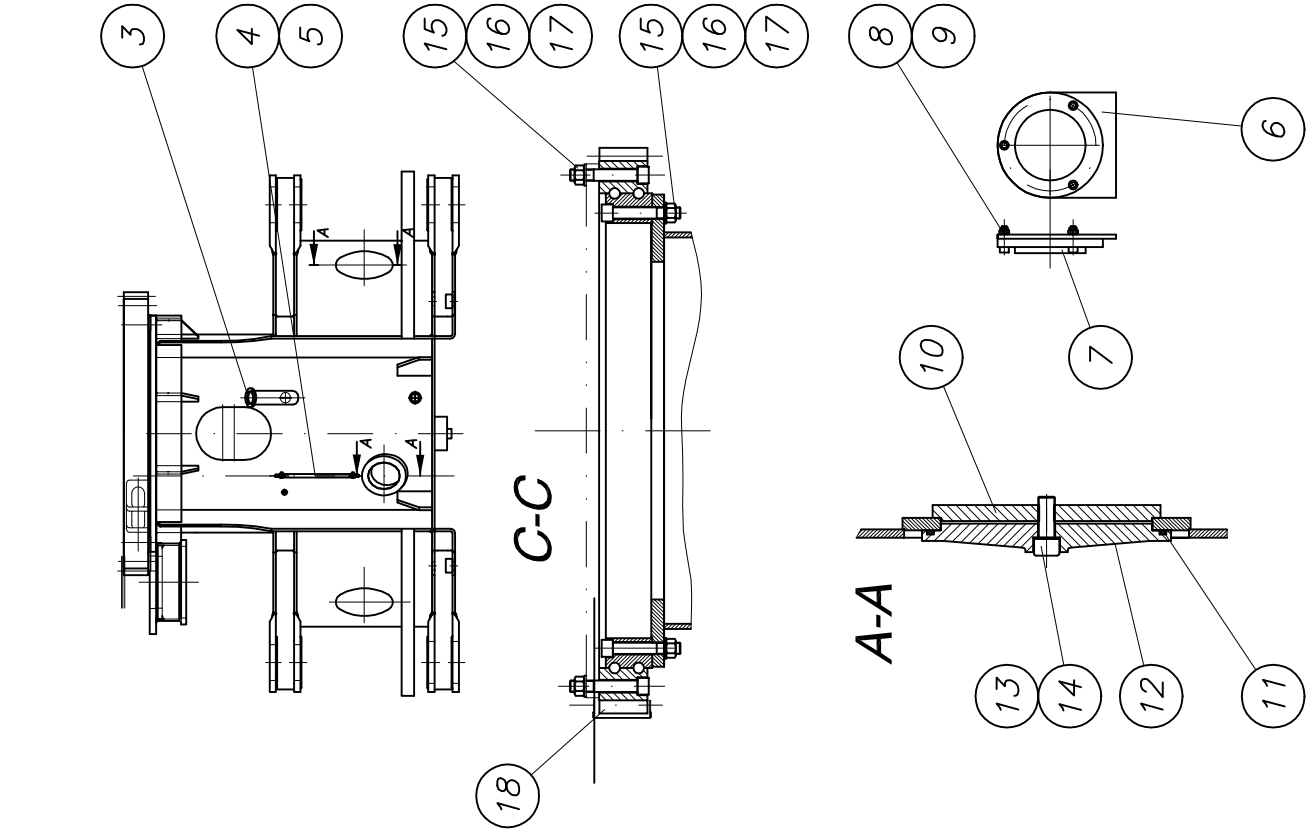

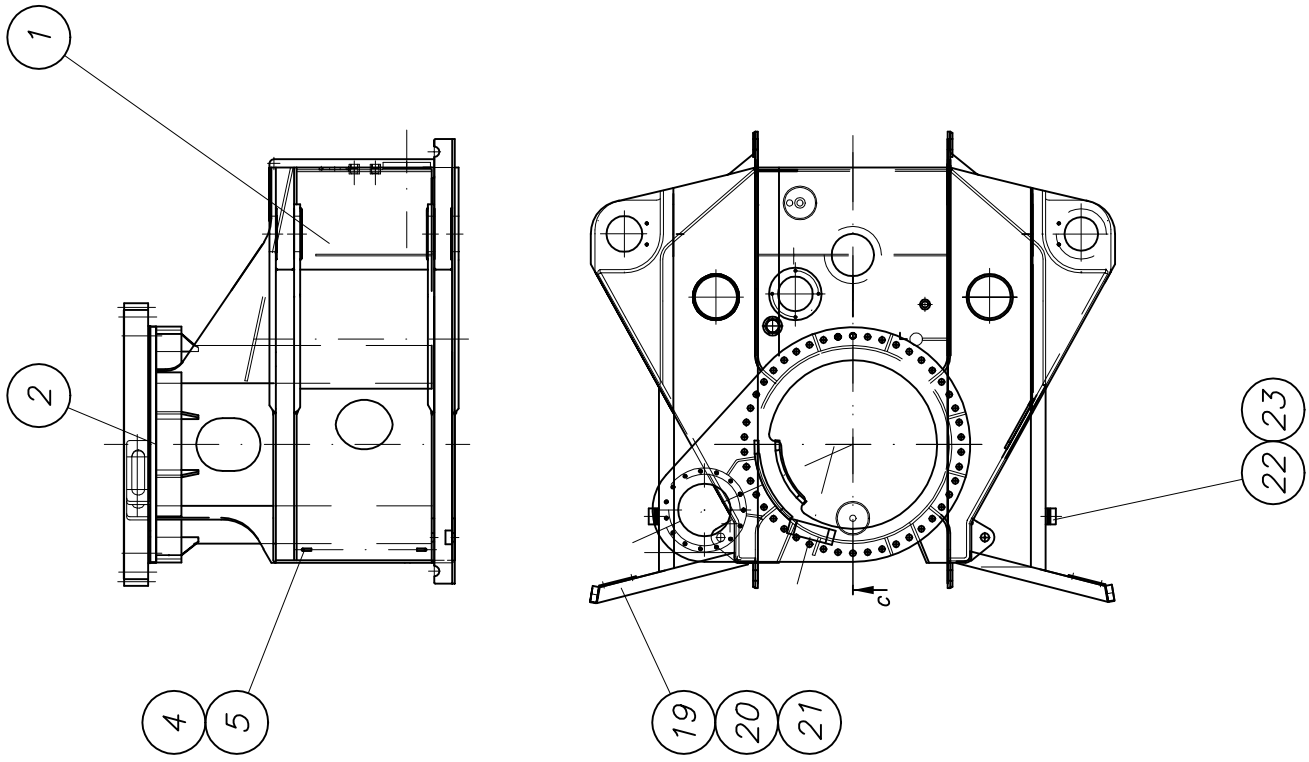

PARTS LIST

22.06.05 11:37:45

part list	description	created	index	valid from	valid to
B612205	pedestal 42 m xxt SHORT	05.12.03 HBK	d	27.10.04	

pos	description stock	ident-no dimensions	DIN material	index	weigth Kg	quantity unit
1	boom base 42XXT cpl. short own parts list	B612200				1,00 Stk
2	lubrication kit for rotation bearing cpl own parts list	WAI108646			3,00	1,00 Stk
3	filling and air filter	WAI106163				2,00 Stk
4	fuel hose DN 12	WAI103104				1,00 Mtr
5	hose clamp 15mm	WAI103103				4,00 Stk
6	holder for can drag and fly	B619093 Bl 5x100x112.5	1543/EN10029 S235J2G3	a 13.02.03	0,22	2,00 Stk
7	box level d80	WAI106237				2,00 Stk
8	cheese head screw M5x20 DIN 912 8.8	WAI103389				6,00 Stk
9	locking nut DIN 980	WAI102068				6,00 Stk
10	star for oilcover FL 15X 220X 220	B610034 Fl 220x220x15	1017 S235JR	a 12.02.03	2,00	5,00 Stk
11	O-ring 217x5, No. A0120.371	WAI106011				5,00 Stk
12	cover for oiltank D236 X 27 36XT	B610033 RD 240x30	1747 Al99		1,80	5,00 Stk
13	cheese head screw M 16 x 55	WAI104550				5,00 Stk
14	u-seal 16,7 x 24 x 1,5T	WAI101572				5,00 Stk
15	cheese head screw M27 x 160	WAI107371				92,00 Stk
16	nut M27 DIN 934	WAI107372				92,00 Stk
17	washer 28	WAI107373				92,00 Stk
18	rotation bearing	WAI107158			440,00	1,00 Stk
19	bracket own parts list	B612110				2,00 Stk
20	stop	B619111 30x60x75	Polyamid			2,00 Stk
21	cylinder head screw M 10 x 25	WAI106654				2,00 Stk
22	washer	B612115 Bl 8xd75	1543/EN10029 S235J2G3		0,27	6,00 Stk

PARTS LIST

22.06.05 11:37:45

part list	description	created	index	valid from	valid to
B612205	pedestal 42 m xxt SHORT	05.12.03 HBK	d	27.10.04	

pos	description stock	ident-no dimensions	DIN material	index	weigth Kg	quantity unit
23	rubber cushion	WAI107199			0,50	2,00 Stk

Schmieranlage kpl.

lubrication system cpl.

WAI 108646

Waitzinger
Baumaschinen GmbH

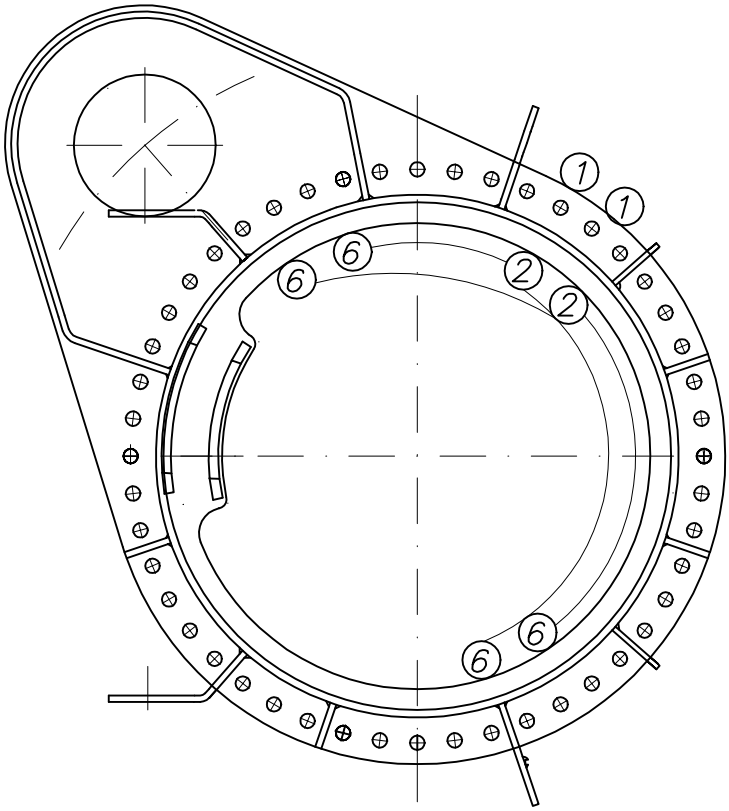

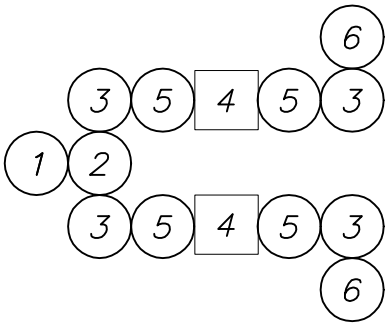

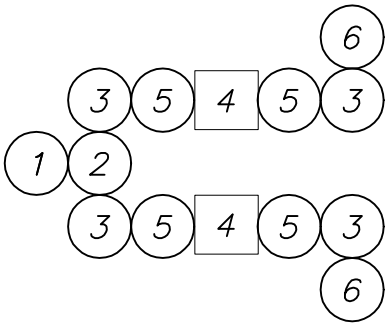

27.02.2004

S T Ü C K L I S T E N - D R U C K

22.06.05 11:39:27

Stückliste	Benennung	Anlage	Änderungsindex	gültig ab	gültig bis
WAI108646	SCHMIERANLAGE FÜR DREHKRANZ KP	29.01.04 a			

Pos	Bezeichnung Rohmaterial	Sach-Nr. Abmessung	DIN Werkstoff	Index	Gewicht Kg	Anzahl Einheit
1	Kegelschmiernippel	WAI100805			0,01	2,00 Stk
2	T-Einschraubverschraubung LL6	WAI106534				2,00 Stk
3	Schlauchstutzen, 90 Grd., lang	WAI102643			0,02	8,00 Stk
4	Kunststoffrohr 8.4x2.1	WAI100255			0,05	5,00 Mtr
5	Schraubhülse für Schlauchstutzen	WAI100254			0,01	8,00 Stk
6	Gerade Einschraubverschraubung LL6 M8x	WAI108723				4,00 Stk

Drehwerkseinheit kpl.

turning unit cpl.

B 62 2 010f

Waitzinger
Baumaschinen GmbH

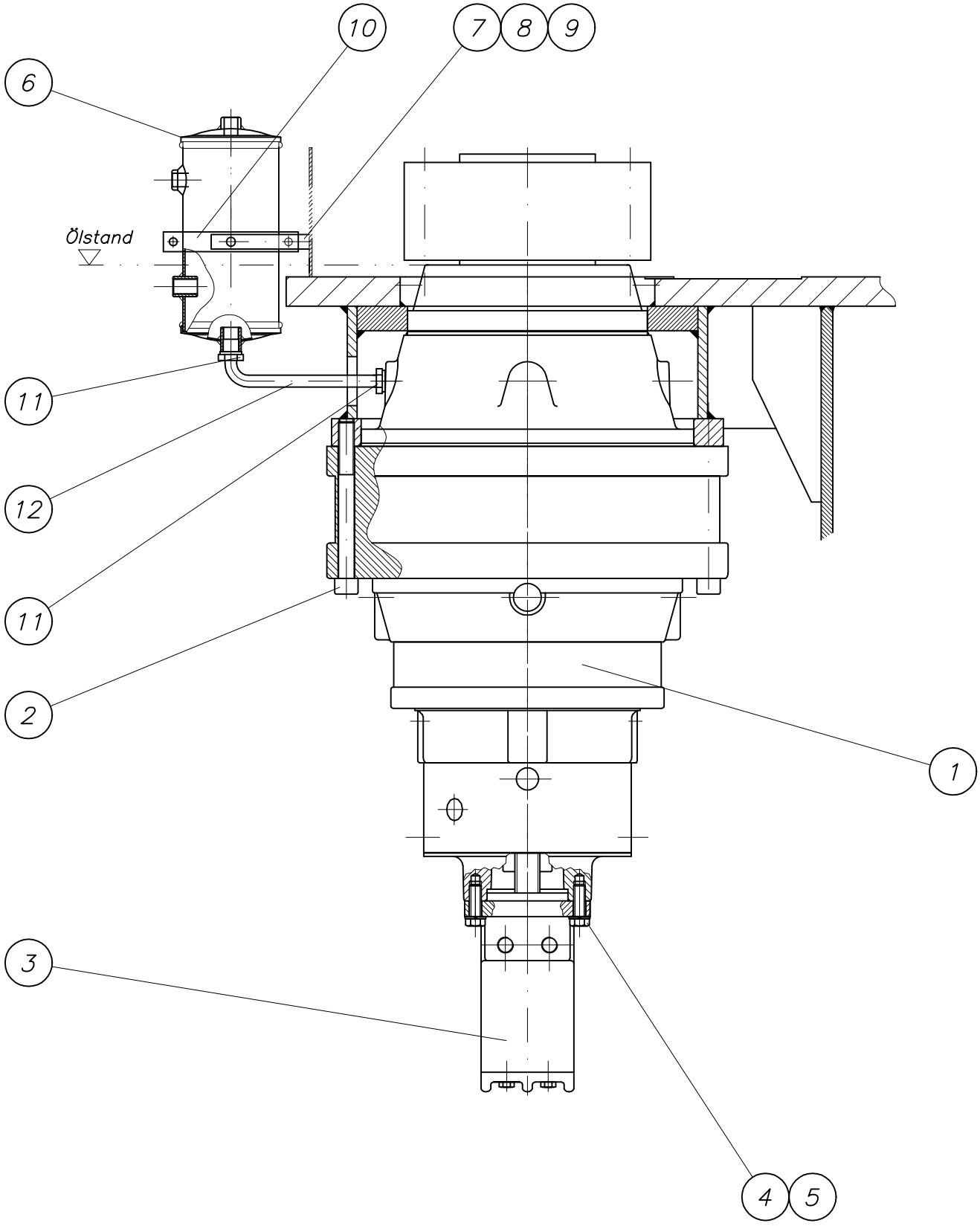

PARTS LIST

22.06.05 11:43:16

part list	description	created	index	valid from	valid to
B622010	turning unit 42 XXT	24.05.02 Mi	f	02.06.05	

pos	description stock	ident-no dimensions	DIN material	index	weigth Kg	quantity unit
1	gearbox PG2503-Pr r 106.2 own parts list	WAI107335			252,00	1,00 Stk
2	cheese head screw M16x160	WAI101255				15,00 Stk
3	hydraulic motor Char Lynn	WAI107338				1,00 Stk
4	hexagon bolt M12 x 35	WAI102122			0,04	2,00 Stk
5	spring washer A12 DIN 127 VERZ.	WAI102896				2,00 Stk
6	expansion tank	WAI109422			2,20	1,00 Stk
7	plate	B622013 Bl 5x15x100	1543/EN 10029 S235J2G3		0,06	1,00 Stk
8	hexagon bolt M 8 x 20	WAI101837				1,00 Stk
9	spring washer A8 DIN 127 VERZ.	WAI102205			0,00	1,00 Stk
10	pipe clamp 100 mm	WAI109545				1,00 Stk
11	straight male stud couplings L12D	WAI100548				2,00 Stk
12	hydr. pipe 12 x 2	WAI102022			0,49	0,40 Mtr

Drehwerksschutzeinrichtung
turning protection cpl.

B 62 2 025

Waitzinger
Baumaschinen GmbH

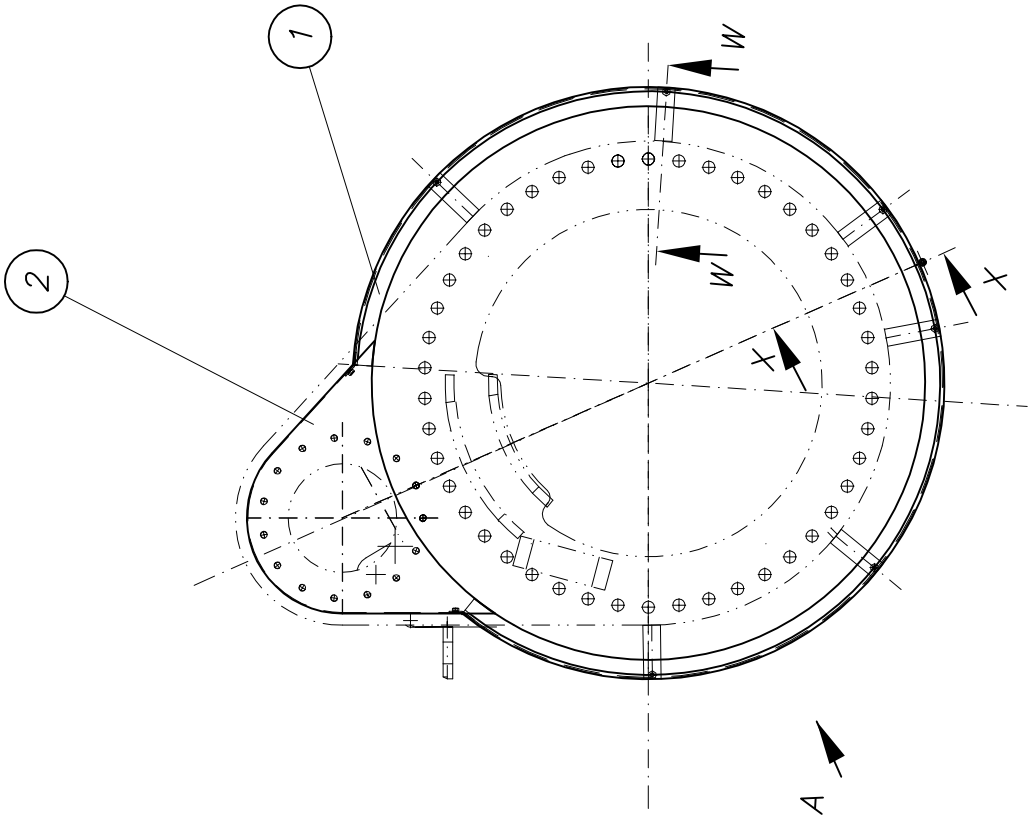

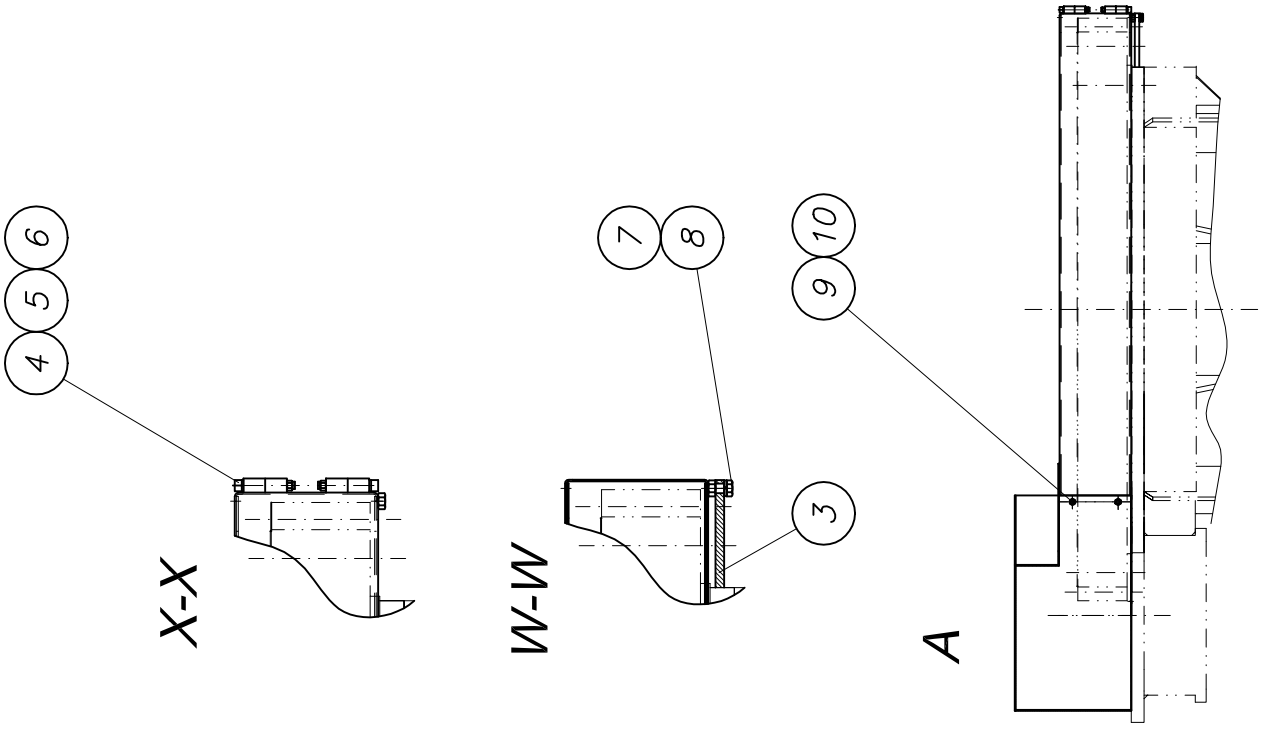

09.09.2004

PARTS LIST

23.06.05 09:07:07

part list	description	created	index	valid from	valid to
B622025	turning unit protection parts 42 XXT	26.06.02 Mi			

pos	description stock	ident-no dimensions	DIN material	index	weigth Kg	quantity unit
1	cover cpl. own parts list	B622015			15,00	1,00 Stk
2	cover cpl. own parts list	B622020			5,50	1,00 Stk
3	holder	B622023 FL 40x10x114	1017 S235J2G3		0,40	6,00 Stk
4	alien bolt M 8x70	WAI105929				2,00 Stk
5	spring washer	WAI100235			0,00	2,00 Stk
6	stop nut M8 DIN985 8. VERZ.	WAI102111			5,00	2,00 Stk
7	hexagon bolt	WAI102244				6,00 Stk
8	spring washer A10	WAI102070			0,00	6,00 Stk
9	hexagon bolt M 8 x 20	WAI101837				4,00 Stk
10	spring washer A8 DIN 127 VERZ.	WAI102205			0,00	4,00 Stk

Abstützung kpl.

outrigger cpl.

B 63 2 340a **1**

Waitzinger
Baumaschinen GmbH

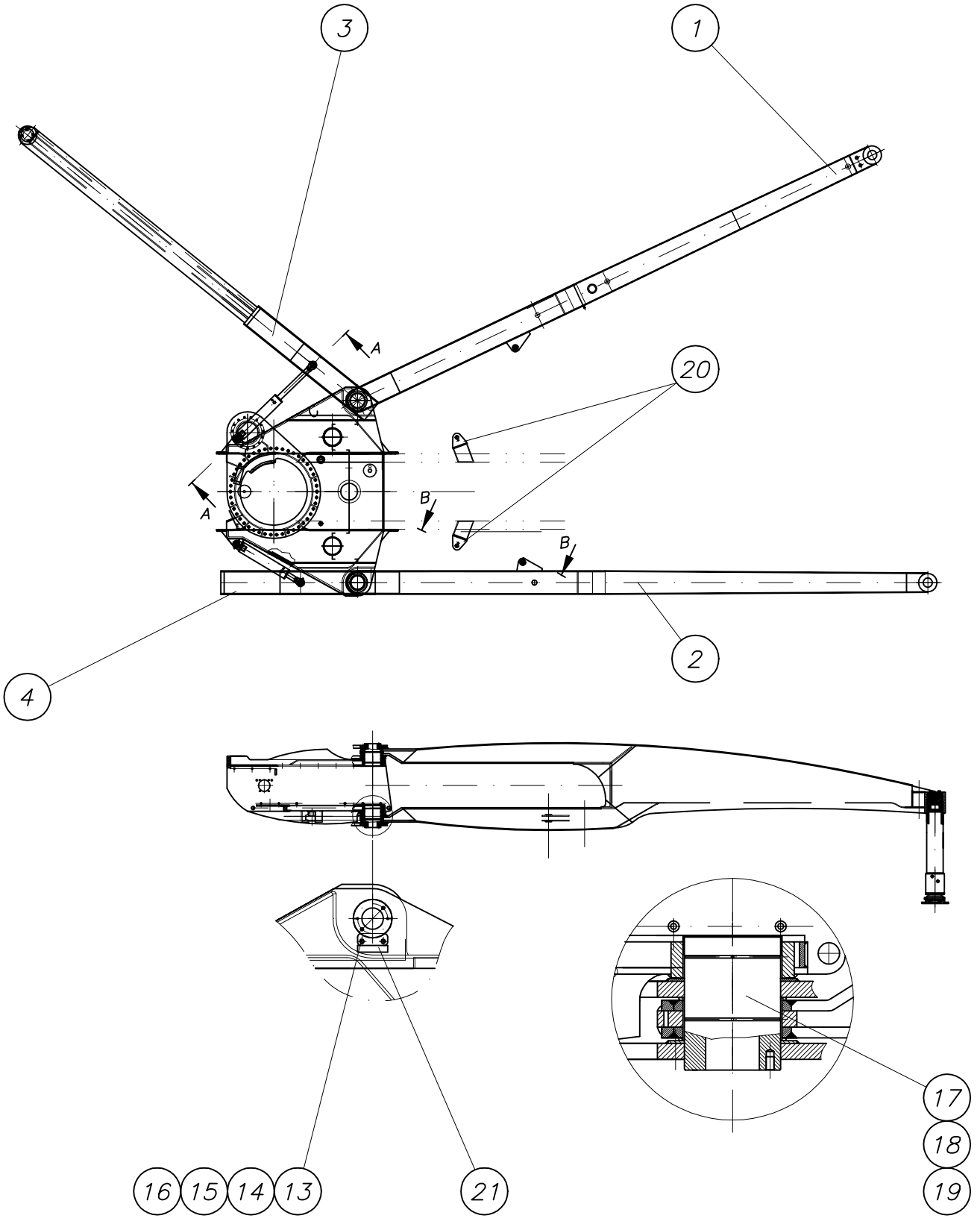

Abstützung kpl.

outrigger cpl.

B 63 2 340a 2

Waitzinger
Baumaschinen GmbH

A-A

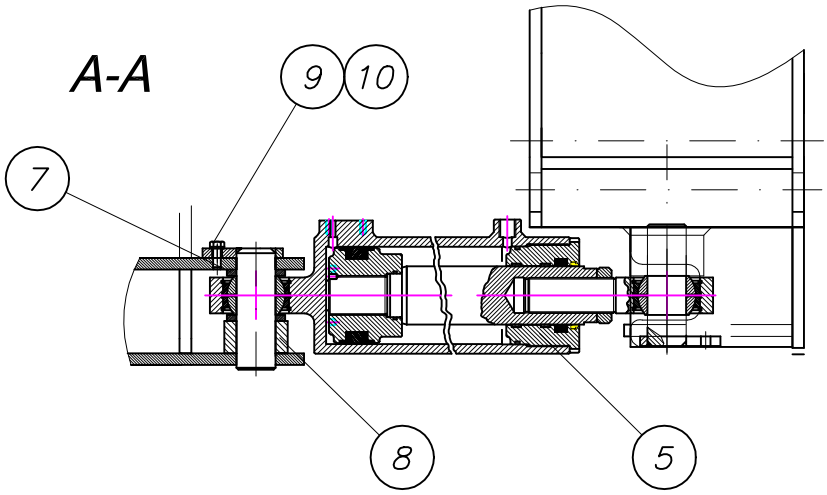

B-B

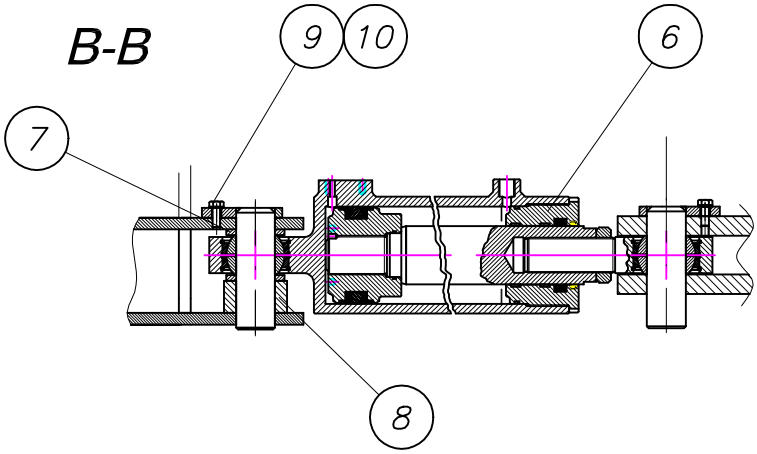

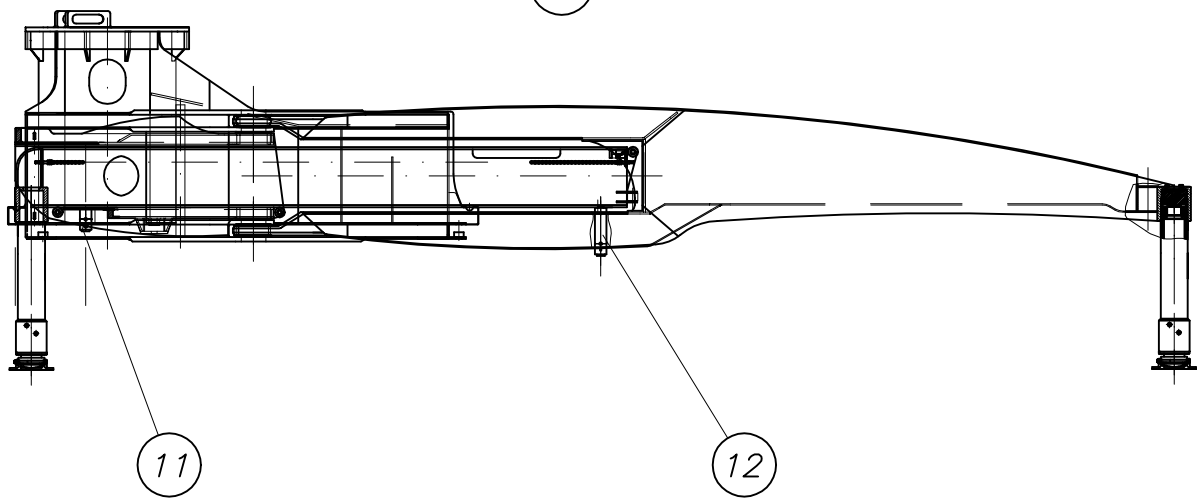

PARTS LIST

14.07.05 07:23:35

part list	description	created	index	valid from	valid to
B632340	outrigger 42 xxt cpl	27.02.04 ek	a	13.07.04	

pos	description stock	ident-no dimensions	DIN material	index	weigth Kg	quantity unit
1	rear right stabilizer 42XXT cpl. own parts list	B632330		a 03.06.05	1021,00	1,00 Stk
2	rear left stabilizer 42XXT cpl. own parts list	B632325		a 03.06.05	1021,00	1,00 Stk
3	front outrigger 42 meter own parts list	B632050		f 12.07.05		1,00 Stk
4	front left stabilizer 42XXT cpl. own parts list	B632051		f 12.07.05		1,00 Stk
5	swing cylinder cpl. own parts list	B632036		a 02.06.05		2,00 Stk
6	swing cylinder cpl. own parts list	B632037		a 02.06.05		2,00 Stk
7	washer	B632038 Bl 6x d60	1543/EN10029 S355J2G3		0,07	4,00 Stk
8	pin cpl. own parts list	B632047		b 18.10.04	1,06	8,00 Stk
9	alien bolt M 8x25	WAI105930				8,00 Stk
10	spring washer A8 DIN 127 VERZ.	WAI102205			0,00	8,00 Stk
11	transport savety device own parts list	B639197		b 14.10.03		2,00 Stk
12	transport savety device own parts list	B639207		b 20.10.04		2,00 Stk
13	pin holder	B632054 Bl 12x55x140	1543/EN10029 S235J2G3		0,70	4,00 Stk
14	hex. bolt M12x30 DIN 933 8.8	WAI102107			0,04	8,00 Stk
15	spring washer A12 DIN 127 VERZ.	WAI102896				8,00 Stk
16	hexagon bolt M16 x 25	WAI103401				8,00 Stk
17	pin 180 x 251	B632064 Rd 190x225	1013 42 CrMo4V		30,00	4,00 Stk
18	grease nipple H1 M10 X 1 DIN 71412	WAI100805			0,01	8,00 Stk
19	sleeve DU 180x185x80	WAI107324				8,00 Stk
20	bracket for cylinder 42 XXT own parts list	B632175			3,00	2,00 stk
21	flat bar	B630013 Fl 30x10x140	1017 S235J2G3		0,30	4,00 Stk

Abstützung hinten rechts kpl.
outrigger right stabilizer cpl.

B 63 2 330a

Waitzinger
Baumaschinen GmbH

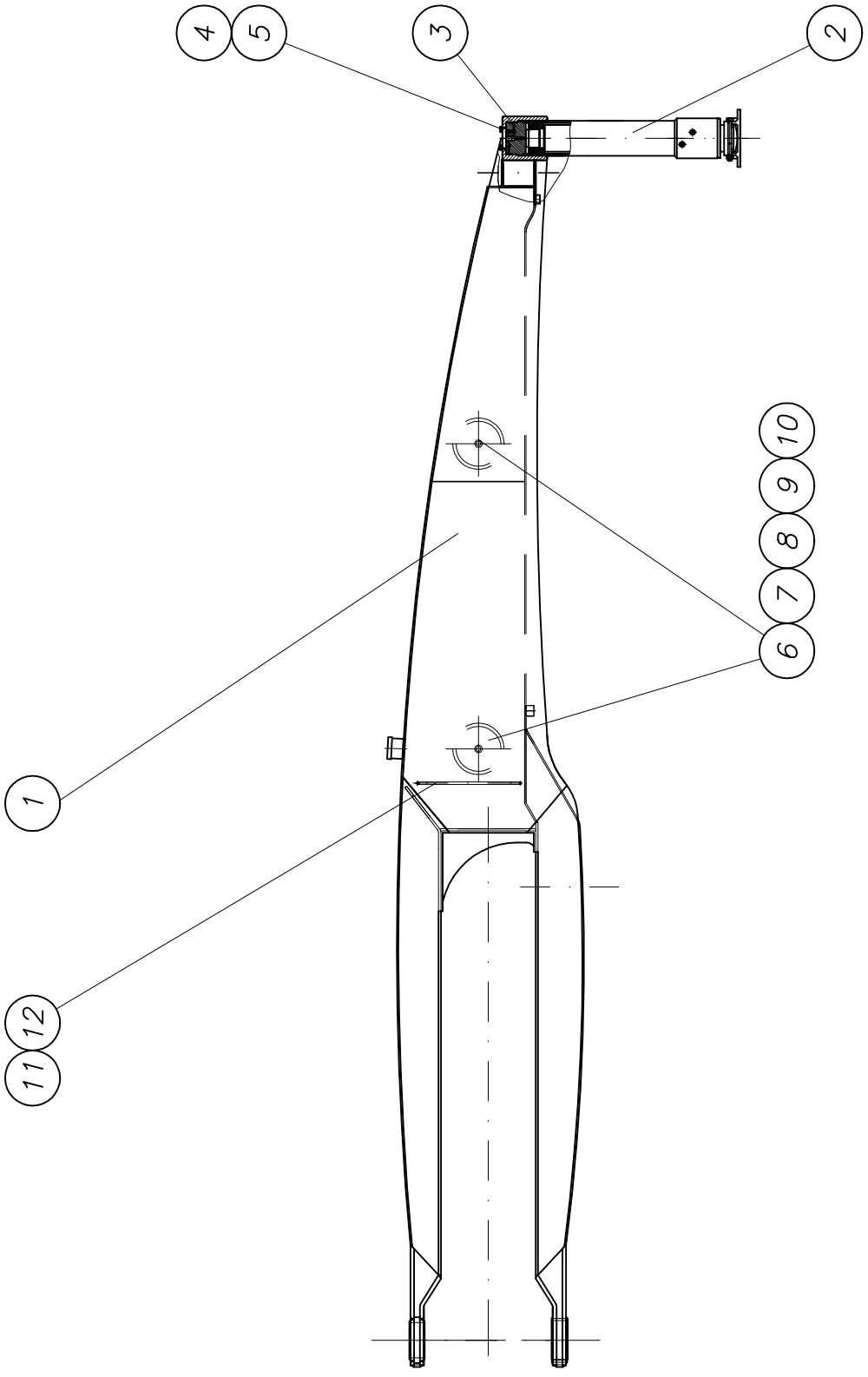

PARTS LIST

01.12.05 08:44:31

part list	description	created	index	valid from	valid to
B632330	rear right stabilizer 42XXT cpl.	27.02.04 ek	a	03.06.05	

pos	description stock	ident-no dimensions	DIN material	index	weigth Kg	quantity unit
1	rear outrigger XXT 42 right process own parts list	B632315				1,00 Stk
2	jack cylinder own parts list	WAI109673		a 25.07.05		1,00 Stk
3	O-ring 129,2 x 5,7	WAI101441				1,00 Stk
4	hexagon bolt M16 x 50	WAI106269			0,17	4,00 Stk
5	spring washer A16	WAI102072			0,01	4,00 Stk
6	cover for oiltank D236 X 27 36XT	B610033 RD 240x30	1747 Al99		1,80	2,00 Stk
7	star for oilcover FL 15X 220X 220	B610034 Fl 220x220x15	1017 S235JR	a 12.02.03	2,00	2,00 Stk
8	O-ring 217x5, No. A0120.371	WAI106011				2,00 Stk
9	cheese head screw M 16 x 65	WAI103388				2,00 Stk
10	u-seal 16,7 x 24 x 1,5T	WAI101572				2,00 Stk
11	fuel hose DN 12	WAI103104				1,00 Mtr
12	hose clamp 15mm	WAI103103				2,00 Stk

Abstützzylinder

jack cylinder

WAI 109673a

Waitzinger
Baumaschinen GmbH

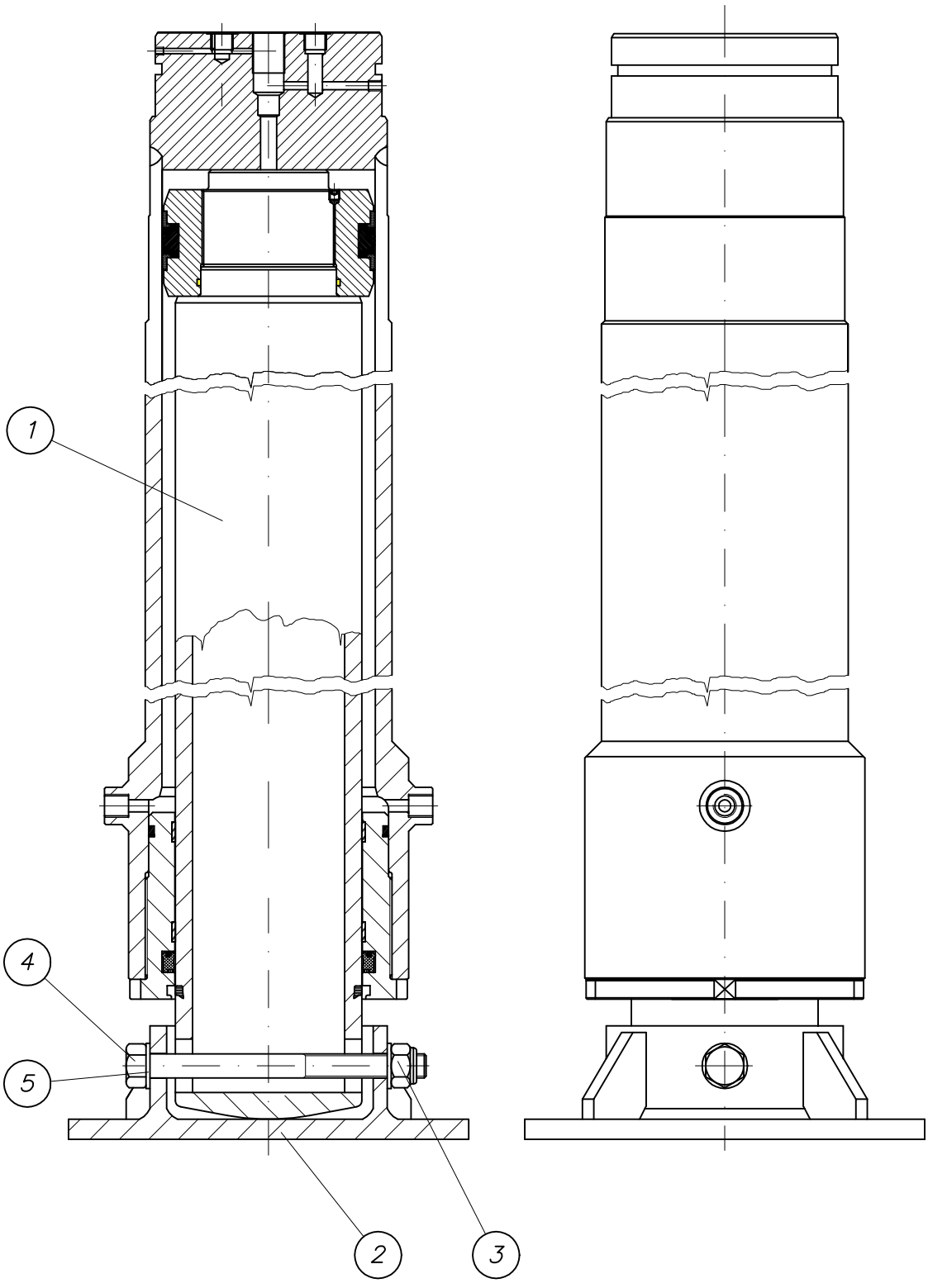

24.08.2005

PARTS LIST

29.11.05 11:59:44

part list	description	created	index	valid from	valid to
WAI109673	jack cylinder	31.05.05 RAINER	a	25.07.05	

pos	description stock	ident-no dimensions	DIN material	index	weigth Kg	quantity unit
1	jack cylinder	WAI109755			140,70	1,00 Stk
2	foot	WAI106778				1,00 Stk
3	hex. nut M18 DIN 985 8. VERZ.	WAI109671				1,00 Stk
4	washer 19	WAI109672				1,00 Stk
5	hexagon screw M 18 x 220	WAI109670				1,00 Stk

Abstützung hinten links kpl.

outrigger left stabilizer cpl.

B 63 2 325a

Waitzinger
Baumaschinen GmbH

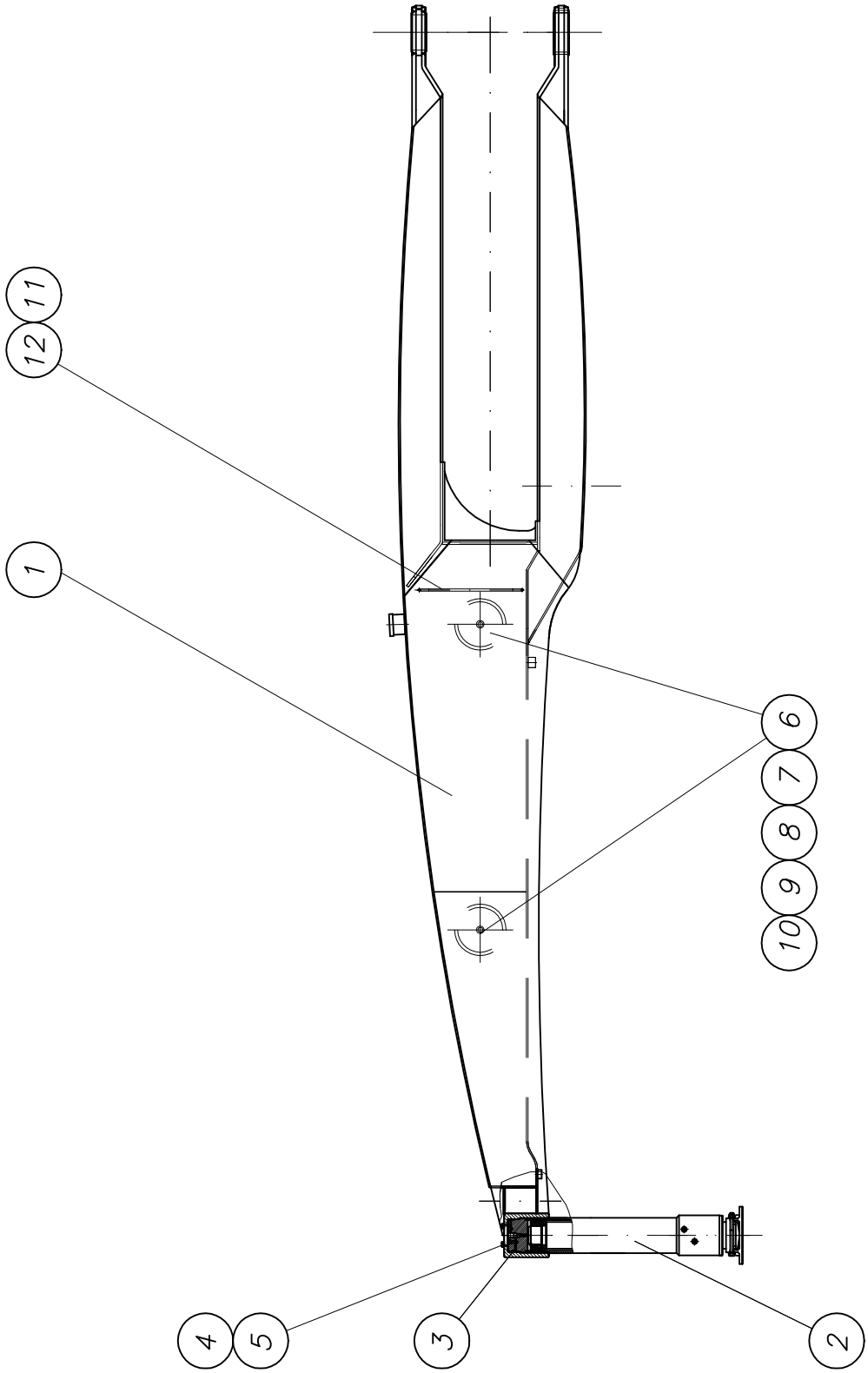

06.06.2005

PARTS LIST

01.12.05 08:45:32

part list	description	created	index	valid from	valid to
B632325	rear left stabilizer 42XXT cpl.	27.02.04 ek	a	03.06.05	

pos	description stock	ident-no dimensions	DIN material	index	weigth Kg	quantity unit
1	rear outrigger XXT 42 left process own parts list	B632320				1,00 Stk
2	jack cylinder own parts list	WAI109673		a 25.07.05		1,00 Stk
3	O-ring 129,2 x 5,7	WAI101441				1,00 Stk
4	hexagon bolt M16 x 50	WAI106269			0,17	4,00 Stk
5	spring washer A16	WAI102072			0,01	4,00 Stk
6	cover for oiltank D236 X 27 36XT	B610033 RD 240x30	1747 Al99		1,80	2,00 Stk
7	star for oilcover FL 15X 220X 220	B610034 Fl 220x220x15	1017 S235JR	a 12.02.03	2,00	2,00 Stk
8	O-ring 217x5, No. A0120.371	WAI106011				2,00 Stk
9	cheese head screw M 16 x 65	WAI103388				2,00 Stk
10	u-seal 16,7 x 24 x 1,5T	WAI101572				2,00 Stk
11	fuel hose DN 12	WAI103104				1,00 Mtr
12	hose clamp 15mm	WAI103103				2,00 Stk

Abstützung vorne rechts kpl.
outrigger front right cpl.

B 63 2 050f **1**

Waitzinger
Baumaschinen GmbH

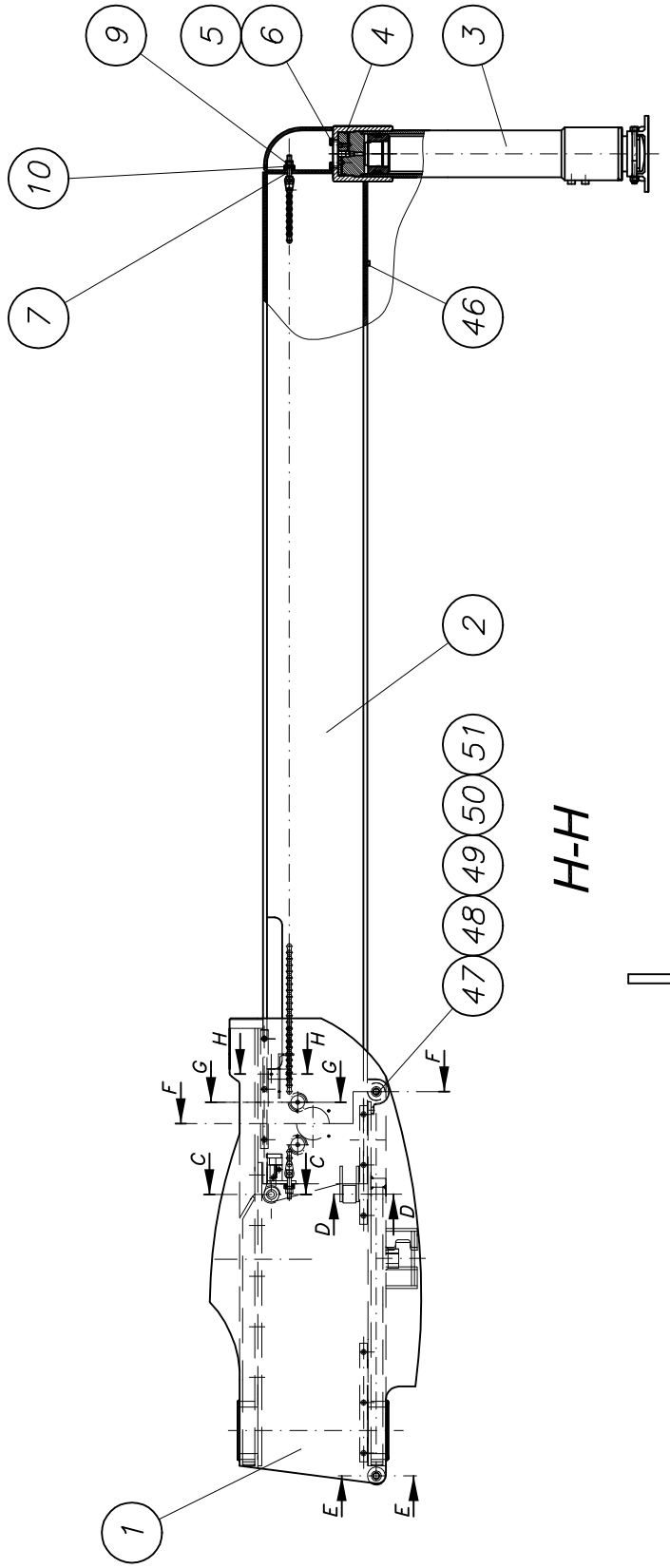

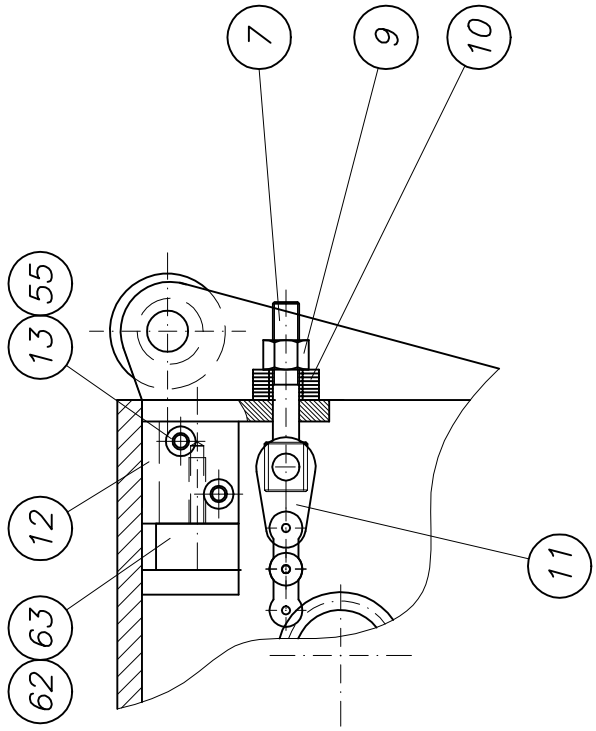

H-H

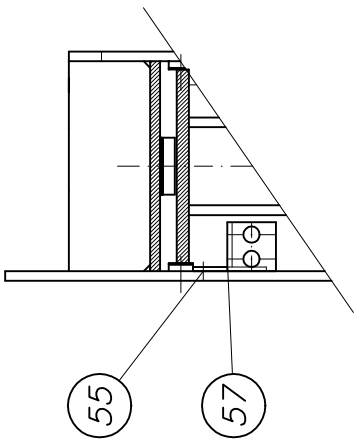

G-G

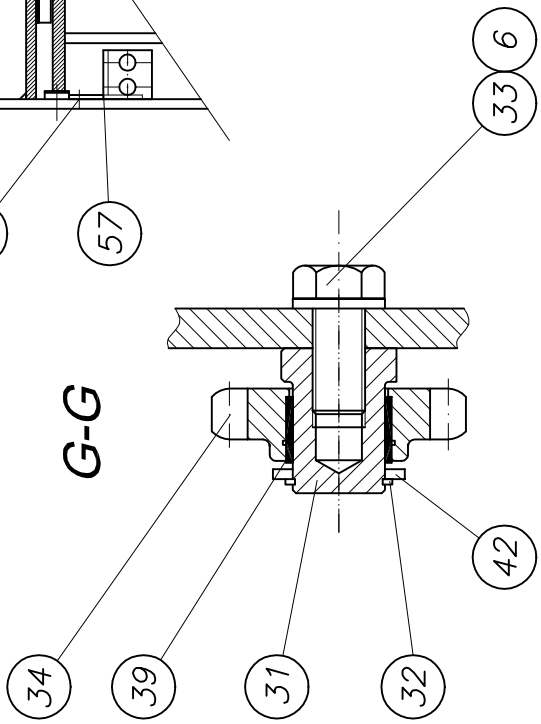

Abstützung vorne rechts kpl.
outrigger front right cpl.

B 63 2 050f 2

Waitzinger
Baumaschinen GmbH

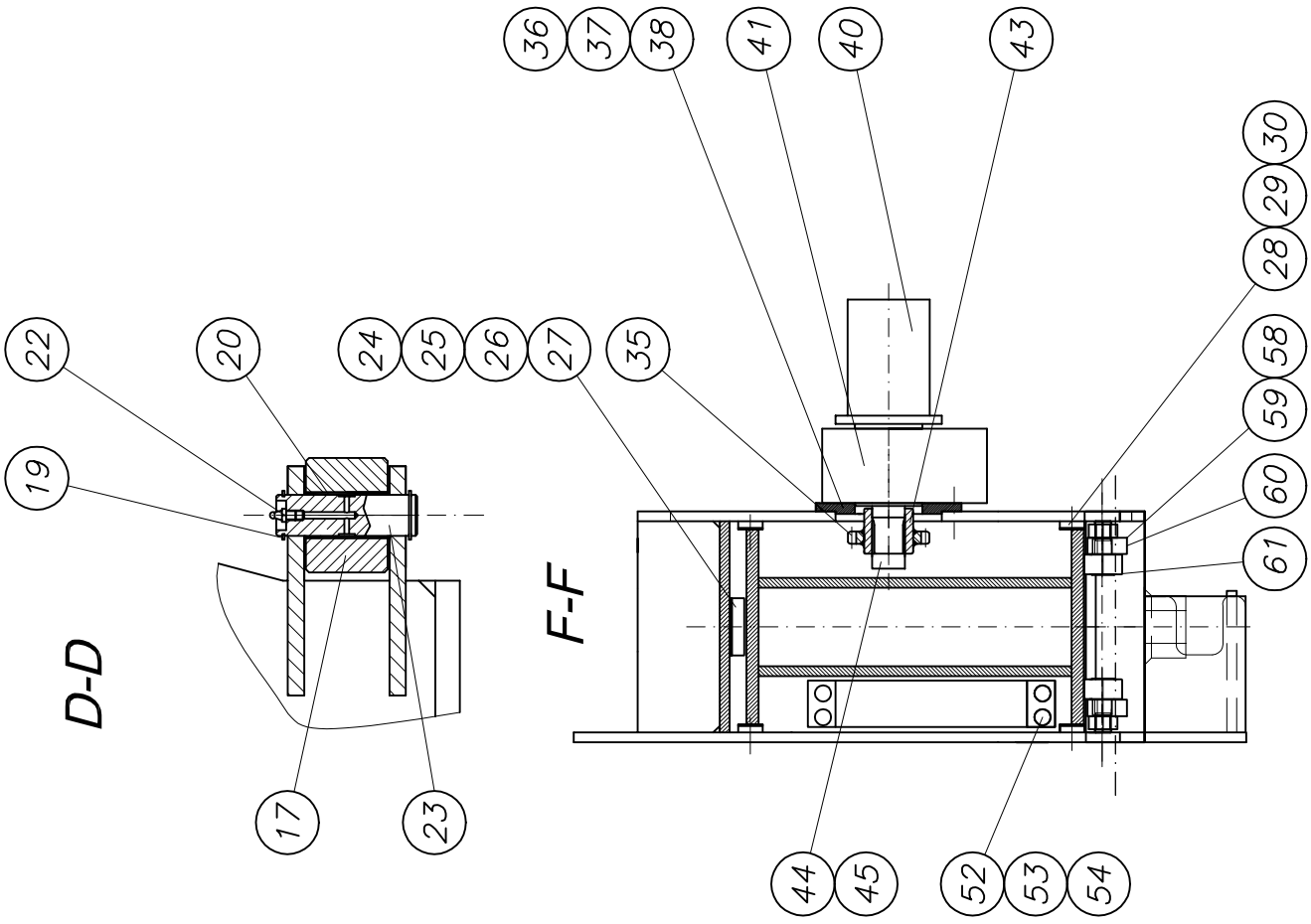

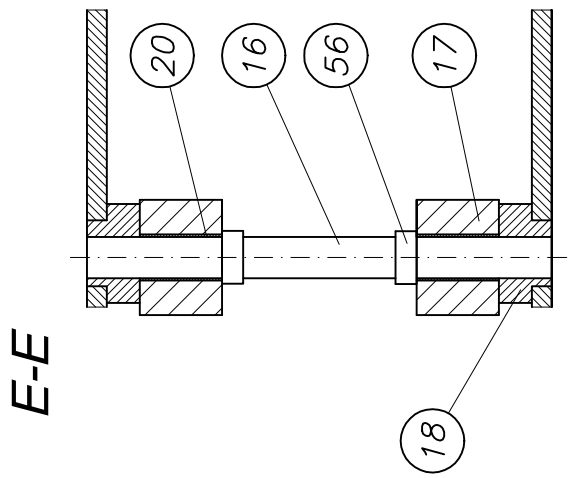

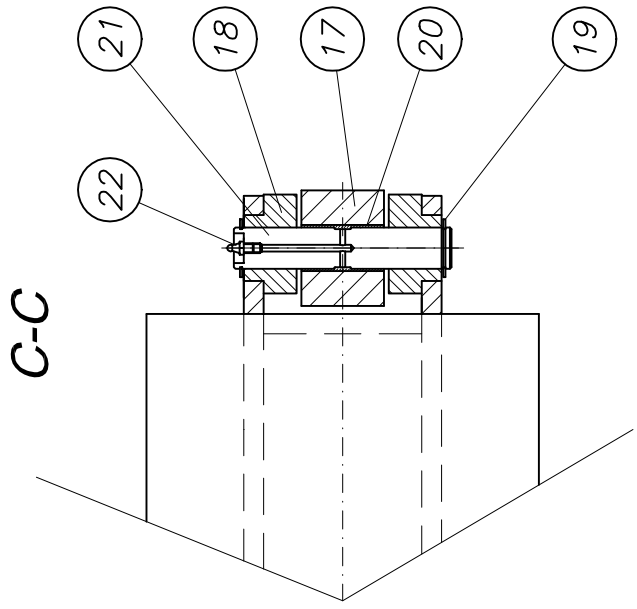

PARTS LIST

14.07.05 07:13:13

part list	description	created	index	valid from	valid to
B632050	front outrigger 42 meter	21.05.02 Mi	f	12.07.05	

pos	description stock	ident-no dimensions	DIN material	index	weigth Kg	quantity unit
1	outrigger 42XXT front right processed own parts list	B632230			345,00	1,00 Stk
2	telecopic 42 XXT tooling own parts list	B632200		a 02.07.04	625,00	1,00 Stk
3	jack cylinder own parts list	WAI109673				1,00 Stk
4	O-ring 129,2 x 5,7	WAI101441				1,00 Stk
5	cheese head screw M 16 x 50	WAI102856				4,00 Stk
6	spring washer A16	WAI102072			0,01	6,00 Stk
7	bolt	B632053 Rd 36x115	1013 S355J2G3		0,20	2,00 Stk
9	nut M16 DIN 934	WAI101555				2,00 Stk
10	conical spring washer	WAI100506				16,00 Stk
11	chain own parts list	WAI107322				1,00 Stk
12	holder for chain cpl. right own parts list	B632068			2,20	1,00 Stk
13	alien bolt M 10 x 55	WAI105285			0,01	2,00 Stk
16	shaft	B639233 Rd 25x 290	669 S235J2G3	c 26.04.05	1,00	1,00 Stk
17	bolt	B632061 Rd 70x50	Lamigamid 320		1,00	4,00 Stk
18	eccenter	B632063 Rd 45x40	1013 S235J2G3		0,20	4,00 Stk
19	locking ring A 25 X 1.2 DIN 471	WAI103006				4,00 Stk
20	bushing DU 25 X 28 X 50	WAI106236				4,00 Stk
21	pin 25 x 136, 3P206	B610023 Rd 25 x 140	669 St50-2K		0,50	1,00 Stk
22	grease nipple M6 DIN 71412	WAI103355				2,00 Stk
23	pin 25 x 085 4P201	B610026 Rd 25 x 90	669 St50-2K		0,32	1,00 Stk
24	strip	B632093 Fl 70x15x1200	1017 S355J2G3		9,50	1,00 Stk

PARTS LIST

part list	description	created	index	valid from	valid to
B632050	front outrigger 42 meter	21.05.02 Mi	f	12.07.05	

pos	description stock	ident-no dimensions	DIN material	index	weigth Kg	quantity unit
25	PLATE	B632094 Bl 1X15X1200	1623/EN10131 ST02Z	a 15.02.05	0,10	3,00 Stk
26	cylinder head screw M 12 x 25	WAI103698				1,00 Stk
27	sunk screw M 12 x 25	WAI107333				4,00 Stk
28	guide profil	B632059 30x8x470	PEUHMW 1000		0,12	4,00 Stk
29	PLATE	B632096 Bl 1x30x470	1623/EN10131 ST02Z	a 15.02.05	0,10	8,00 Stk
30	sunk screw M 10 x 20	WAI104689				12,00 Stk
31	bolt	B632043 Rd 35x47	1013 S355J2G3			2,00 Stk
32	locking ring	WAI107339				2,00 Stk
33	hexagon bolt M12 x 35	WAI102122			0,04	2,00 Stk
34	free pinion 9K115	WAI106040				2,00 Stk
35	gear 9K116	WAI106041				1,00 Stk
36	flange	B632044 Bl 15xd180	1543/EN10029 S235J2G3		2,00	1,00 Stk
37	zylinder head screw M10 x 30	WAI103826				8,00 Stk
38	spring washer A10	WAI102070			0,00	8,00 Stk
39	bushing 28x32x20	WAI107340				2,00 Stk
40	hydraulic motor 250ccm	WAI107377			7,25	1,00 Stk
41	gearbox ODR 70	WAI107378				1,00 Stk
42	washer	B632042 Bl 3xd40	1543/EN10029 S355J2G3			2,00 Stk
43	conection piece	B632067 Rd 60x55	668 S355J2G3	a 23.02.04	1,50	1,00 Stk
44	cover f. telescop motor	WAI108739			0,20	1,00 Stk
45	countersunk screw	WAI103176				3,00 Stk

PARTS LIST

14.07.05 07:13:13

part list	description	created	index	valid from	valid to
B632050	front outrigger 42 meter	21.05.02 Mi	f	12.07.05	

pos	description stock	ident-no dimensions	DIN material	index	weigth Kg	quantity unit
46	fixing sheet	B632104 FL 10x20x60	174 S355J2G3		0,10	1,00 Stk
47	housing	B951044 Bl 3x250x232	 Alu	b 11.07.05	0,50	1,00 Stk
48	strip	B632108 Fl 12x25x150	174 S355J2G3	b 11.07.05	0,29	1,00 Stk
49	cheese head screw M 8 x 10	WAI108302				2,00 Stk
50	washer 8.4	WAI101625				2,00 Stk
51	spring washer A8 DIN 127 VERZ.	WAI102205			0,00	2,00 Stk
52	energie chain	WAI108645			0,01	1,00 Stk
53	cheese head screw M 6x16	WAI101658				4,00 Stk
54	spring washer A6	WAI103000				4,00 Stk
55	sunk screw M 10 x 20	WAI104689				4,00 Stk
56	fixing ring	WAI108884 Di25 Da40 B16	DIN 705		0,05	2,00 Stk
57	bolt right own parts list	B632117		b 30.03.05		1,00 Stk
58	bracket	B632179 Bl 20x48x133	1543/EN10029 S355J2G3	a 11.07.05	0,70	2,00 Stk
59	spacer plate	B632181 Bl 1x75x20	1623/EN10131 S235J2G3		0,01	4,00 Stk
60	hexagon bolt M 8 x 50 DIN 931 8.8	wai108743				4,00 Stk
61	roller	wai109571 Rd 60 x 30	 Polyamid		0,02	2,00 Stk
62	stop	B632182 50x28	 Polyamid		0,10	1,00 Stk
63	cheese head screw	wai101567			0,01	1,00 Stk

Abstützung vorne links kpl.

outrigger front left cpl.

B 63 2 051f 1

Waitzinger
Baumaschinen GmbH

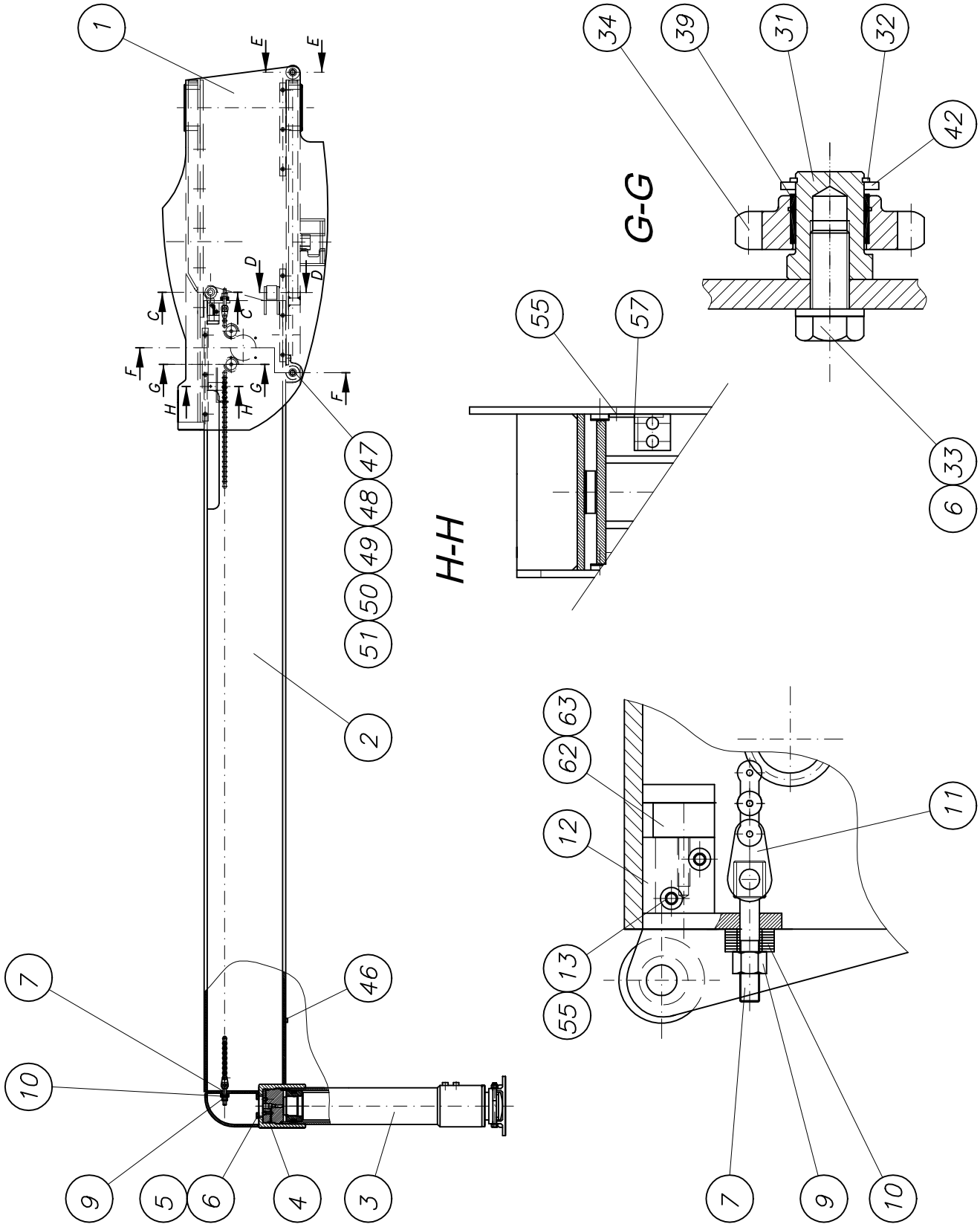

13.07.2005

Abstützung vorne links kpl.
outrigger front left cpl.

B 63 2 051f **2**

Waitzinger
Baumaschinen GmbH

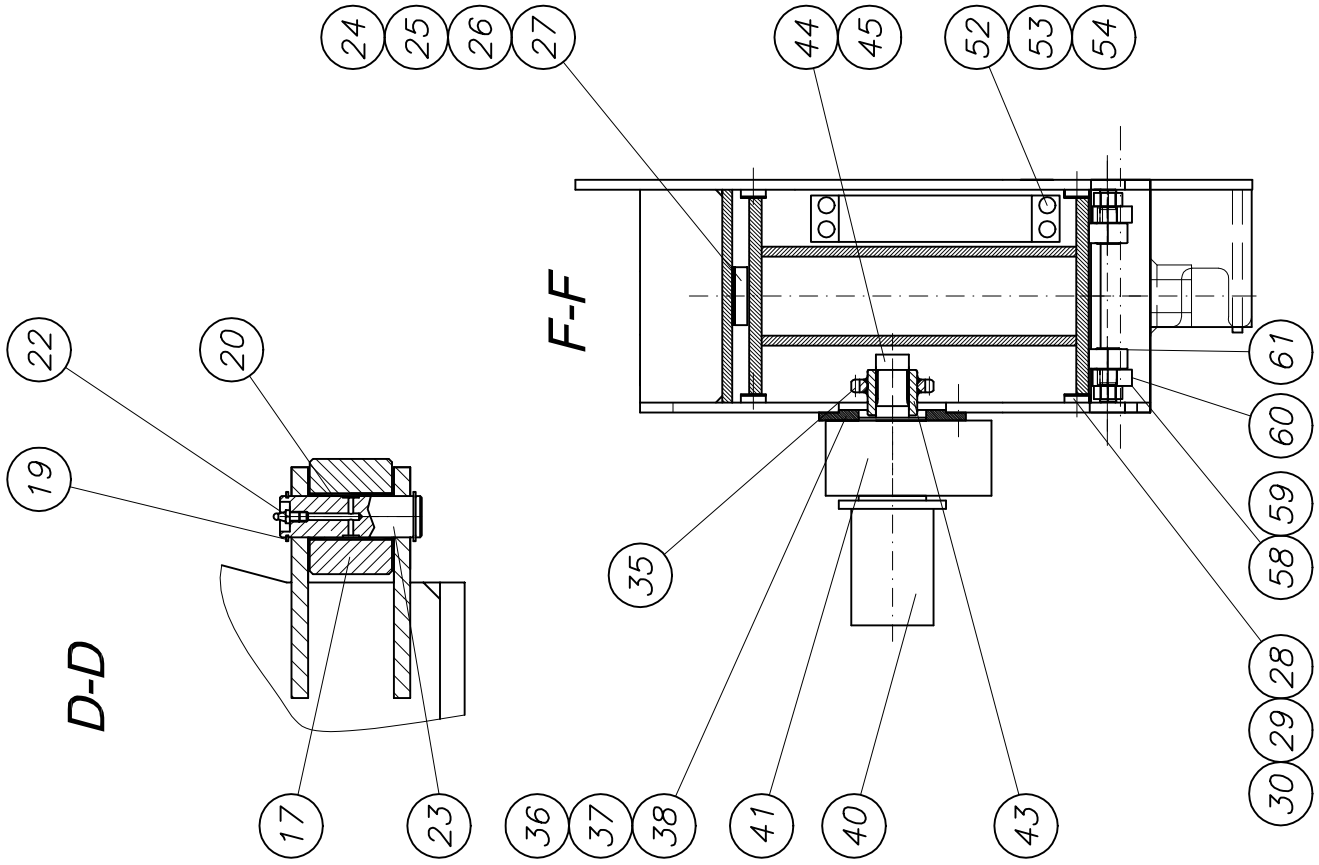

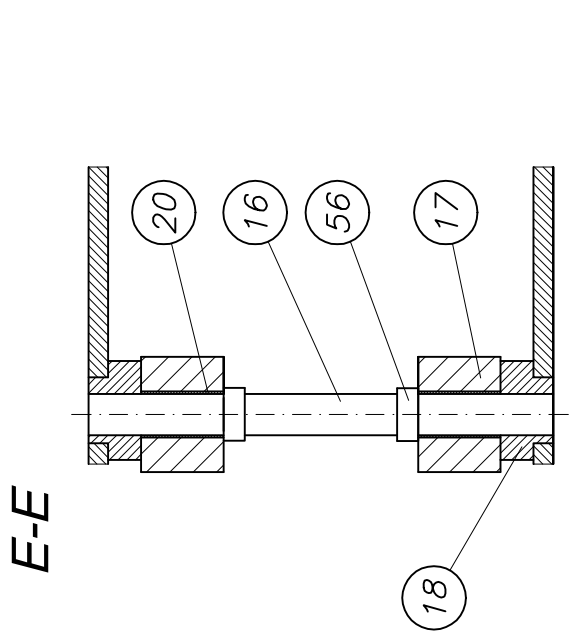

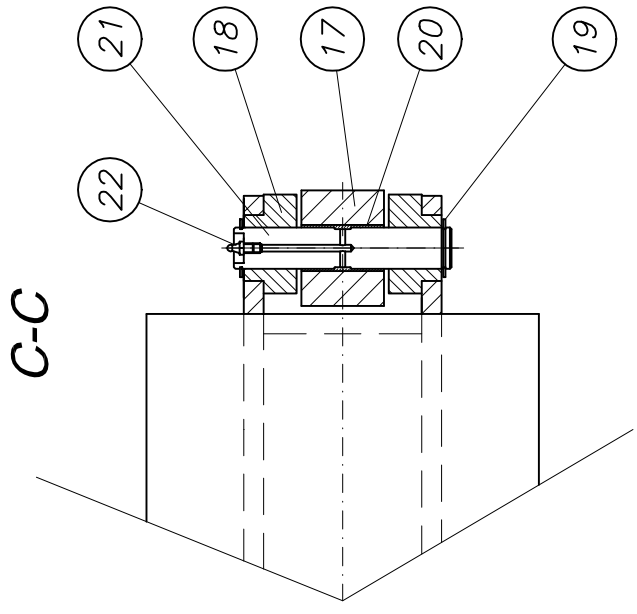

PARTS LIST

14.07.05 07:13:55

part list	description	created	index	valid from	valid to
B632051	front left stabilizer 42XXT cpl.	22.05.02 Mi	f	12.07.05	

pos	description stock	ident-no dimensions	DIN material	index	weigth Kg	quantity unit
1	outrigger 42XXT front left processed own parts list	B632235			345,00	1,00 Stk
2	telecopic 42 XXT tooling own parts list	B632202		a 02.07.04	625,00	1,00 Stk
3	jack cylinder own parts list	WAI109673				1,00 Stk
4	O-ring 129,2 x 5,7	WAI101441				1,00 Stk
5	cheese head screw M 16 x 50	WAI102856				4,00 Stk
6	spring washer A16	WAI102072			0,01	6,00 Stk
7	bolt	B632053 Rd 36x115	1013 S355J2G3		0,20	2,00 Stk
9	nut M16 DIN 934	WAI101555				2,00 Stk
10	conical spring washer	WAI100506				16,00 Stk
11	chain own parts list	WAI107322				1,00 Stk
12	holder for chain cpl. left own parts list	B632048		a 02.07.04	2,20	1,00 Stk
13	alien bolt M 10 x 55	WAI105285			0,01	2,00 Stk
16	shaft	B639233 Rd 25x 290	669 S235J2G3	c 26.04.05	1,00	1,00 Stk
17	bolt	B632061 Rd 70x50	Lamigamid 320		1,00	4,00 Stk
18	eccenter	B632063 Rd 45x40	1013 S235J2G3		0,20	4,00 Stk
19	locking ring A 25 X 1.2 DIN 471	WAI103006				4,00 Stk
20	bushing DU 25 X 28 X 50	WAI106236				4,00 Stk
21	pin 25 x 136, 3P206	B610023 Rd 25 x 140	669 St50-2K		0,50	1,00 Stk
22	grease nipple M6 DIN 71412	WAI103355				2,00 Stk
23	pin 25 x 085 4P201	B610026 Rd 25 x 90	669 St50-2K		0,32	1,00 Stk
24	strip	B632093 Fl 70x15x1200	1017 S355J2G3		9,50	1,00 Stk

PARTS LIST

14.07.05 07:13:55

part list	description	created	index	valid from	valid to
B632051	front left stabilizer 42XXT cpl.	22.05.02 Mi	f	12.07.05	

pos	description stock	ident-no dimensions	DIN material	index	weigth Kg	quantity unit
25	PLATE	B632094 Bl 1X15X1200	1623/EN10131 ST02Z	a 15.02.05	0,10	3,00 Stk
26	cylinder head screw M 12 x 25	WAI103698				1,00 Stk
27	sunk screw M 12 x 25	WAI107333				4,00 Stk
28	guide profil	B632059 30x8x470	PEUHMW 1000		0,12	4,00 Stk
29	PLATE	B632096 Bl 1x30x470	1623/EN10131 ST02Z	a 15.02.05	0,10	8,00 Stk
30	sunk screw M 10 x 20	WAI104689				12,00 Stk
31	bolt	B632043 Rd 35x47	1013 S355J2G3			2,00 Stk
32	locking ring	WAI107339				2,00 Stk
33	hexagon bolt M12 x 35	WAI102122			0,04	2,00 Stk
34	free pinion 9K115	WAI106040				2,00 Stk
35	gear 9K116	WAI106041				1,00 Stk
36	flange	B632044 Bl 15xd180	1543/EN10029 S235J2G3		2,00	1,00 Stk
37	zylinder head screw M10 x 30	WAI103826				8,00 Stk
38	spring washer A10	WAI102070			0,00	8,00 Stk
39	bushing 28x32x20	WAI107340				2,00 Stk
40	hydraulic motor 250ccm	WAI107377			7,25	1,00 Stk
41	gearbox ODR 70	WAI107378				1,00 Stk
42	washer	B632042 Bl 3xd40	1543/EN10029 S355J2G3			2,00 Stk
43	conection piece	B632067 Rd 60x55	668 S355J2G3	a 23.02.04	1,50	1,00 Stk
44	cover f. telescop motor	WAI108739			0,20	1,00 Stk
45	countersunk screw	WAI103176				3,00 Stk

PARTS LIST

14.07.05 07:13:55

part list	description	created	index	valid from	valid to
B632051	front left stabilizer 42XXT cpl.	22.05.02 Mi	f	12.07.05	

pos	description stock	ident-no dimensions	DIN material	index	weigth Kg	quantity unit
46	fixing sheet	B632104 FL 10x20x60	174 S355J2G3		0,10	1,00 Stk
47	housing	B951044 Bl 3x250x232	 Alu	b 11.07.05	0,50	1,00 Stk
48	strip	B632108 Fl 12x25x150	174 S355J2G3	b 11.07.05	0,29	1,00 Stk
49	cheese head screw M 8 x 10	WAI108302				2,00 Stk
50	washer 8.4	WAI101625				2,00 Stk
51	spring washer A8 DIN 127 VERZ.	WAI102205			0,00	2,00 Stk
52	energie chain	WAI108645			0,01	1,00 Stk
53	cheese head screw M 6x16	WAI101658				4,00 Stk
54	spring washer A6	WAI103000				4,00 Stk
55	sunk screw M 10 x 20	WAI104689				4,00 Stk
56	fixing ring	WAI108884 Di25 Da40 B16	DIN 705		0,05	2,00 Stk
57	bolt left own parts list	B632114		b 30.03.05		1,00 Stk
58	bracket	B632179 Bl 20x48x133	1543/EN10029 S355J2G3	a 11.07.05	0,70	2,00 Stk
59	spacer plate	B632181 Bl 1x75x20	1623/EN10131 S235J2G3		0,01	4,00 Stk
60	hexagon bolt M 8 x 50 DIN 931 8.8	wai108743				4,00 Stk
61	roller	WAI109571 Rd 60 x 30	 Polyamid		0,02	2,00 Stk
62	stop	B632182 50x28	 Polyamid		0,10	1,00 Stk
63	cheese head screw	WAI101567			0,01	1,00 Stk

Ausschwenkzylinder vorne kpl.

swing cylinder front cpl.

B 63 2 036a

Waitzinger
Baumaschinen GmbH

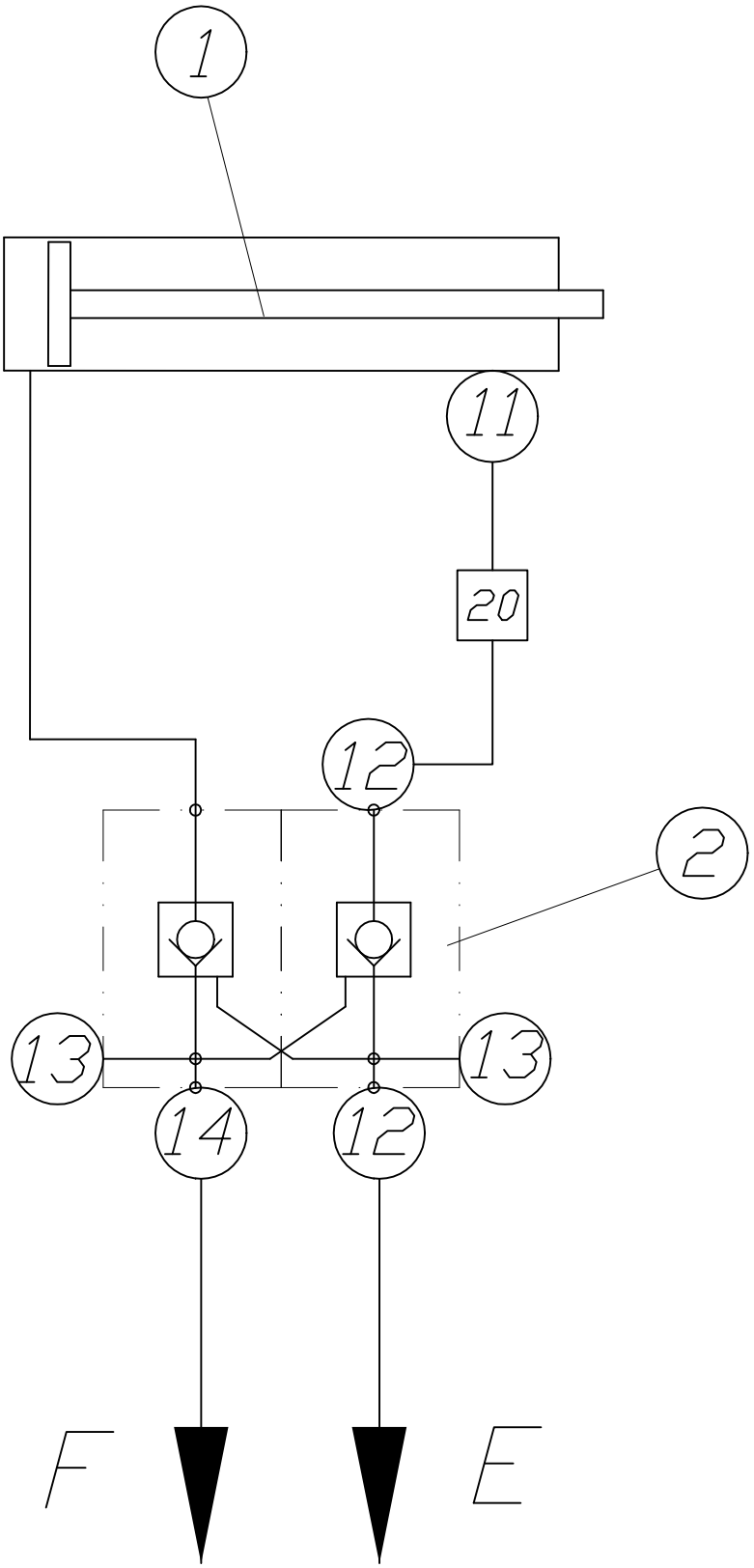

PARTS LIST

23.06.05 08:14:50

part list	description	created	index	valid from	valid to
B632036	swing cylinder cpl.	11.11.03 Mi	a	02.06.05	

pos	description stock	ident-no dimensions	DIN material	index	weigth Kg	quantity unit
1	swing cylinder 100x 60 x 475 42XXT own parts list	WAI107364				1,00 Stk
2	pilot operated twin check valve	WAI106410				1,00 Stk
11	banjo coupling L12 RD	WAI103684				1,00 Stk
12	straight male stud couplings L12D	WAI100548				2,00 Stk
13	locking screw G 3/8	WAI100521				2,00 Stk
14	straight male stud couplings L12R 1.5 own parts list	WAI106427			0,13	1,00 Stk
20	hydr. pipe 12 x 2	WAI102022			0,49	0,30 Mtr

Ausschwenkzylinder kpl.

swing cylinder cpl.

WAI 107364

Waitzinger
Baumaschinen GmbH

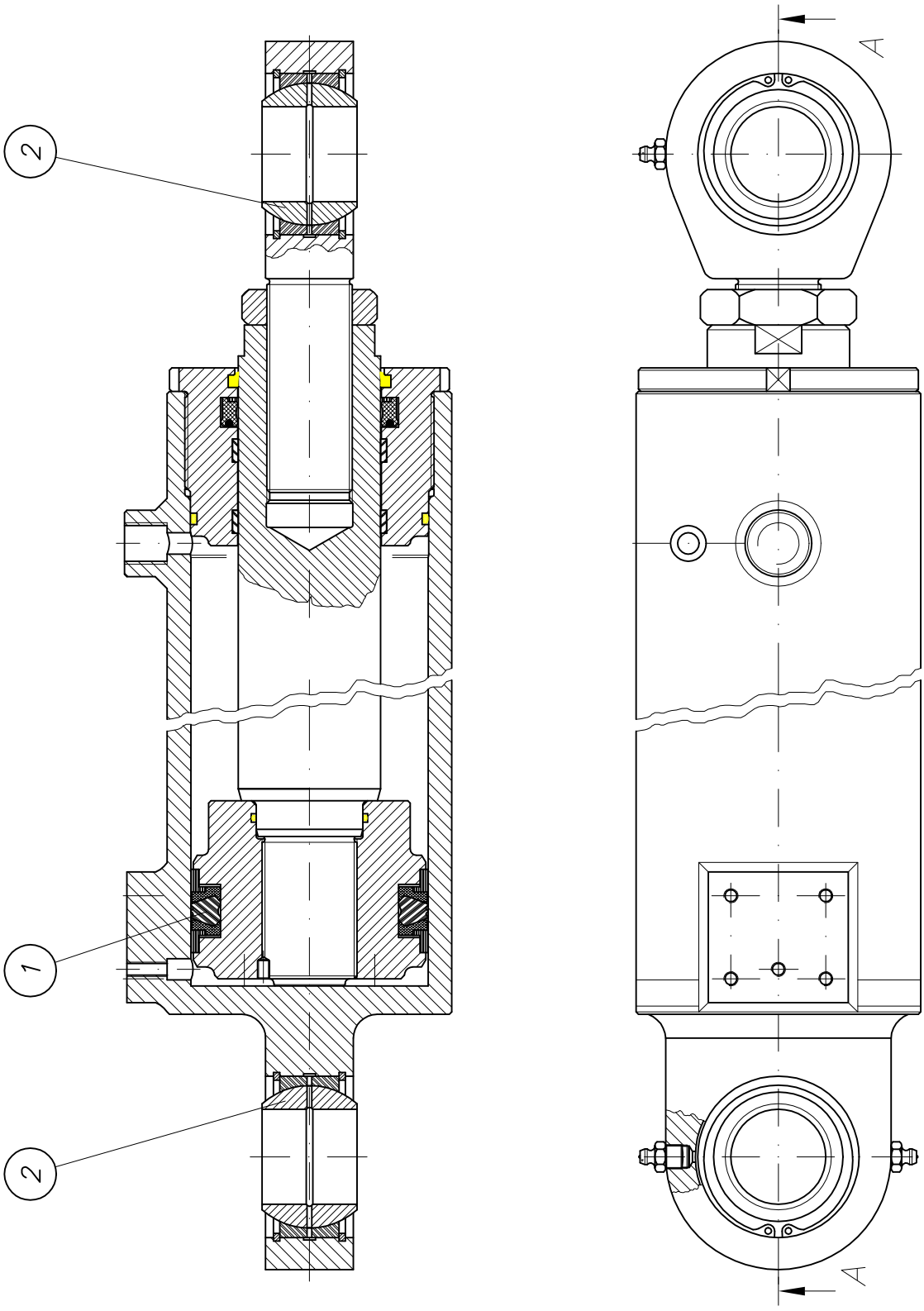

27.11.2003

PARTS LIST

23.06.05 08:18:04

part list	description	created	index	valid from	valid to
WAI107364	swing cylinder 100x 60 x 475 42XXT	24.10.03 HG			

pos	description stock	ident-no dimensions	DIN material	index	weigth Kg	quantity unit
1	sealing kit for swing cylinder 42XXT	WAI108535				1,00 Stk
2	joint bearing	WAI100233			0,60	2,00 Stk

Ausschwenkzylinder hinten kpl.

swing cylinder cpl.

B 63 2 037a

Waitzinger
Baumaschinen GmbH

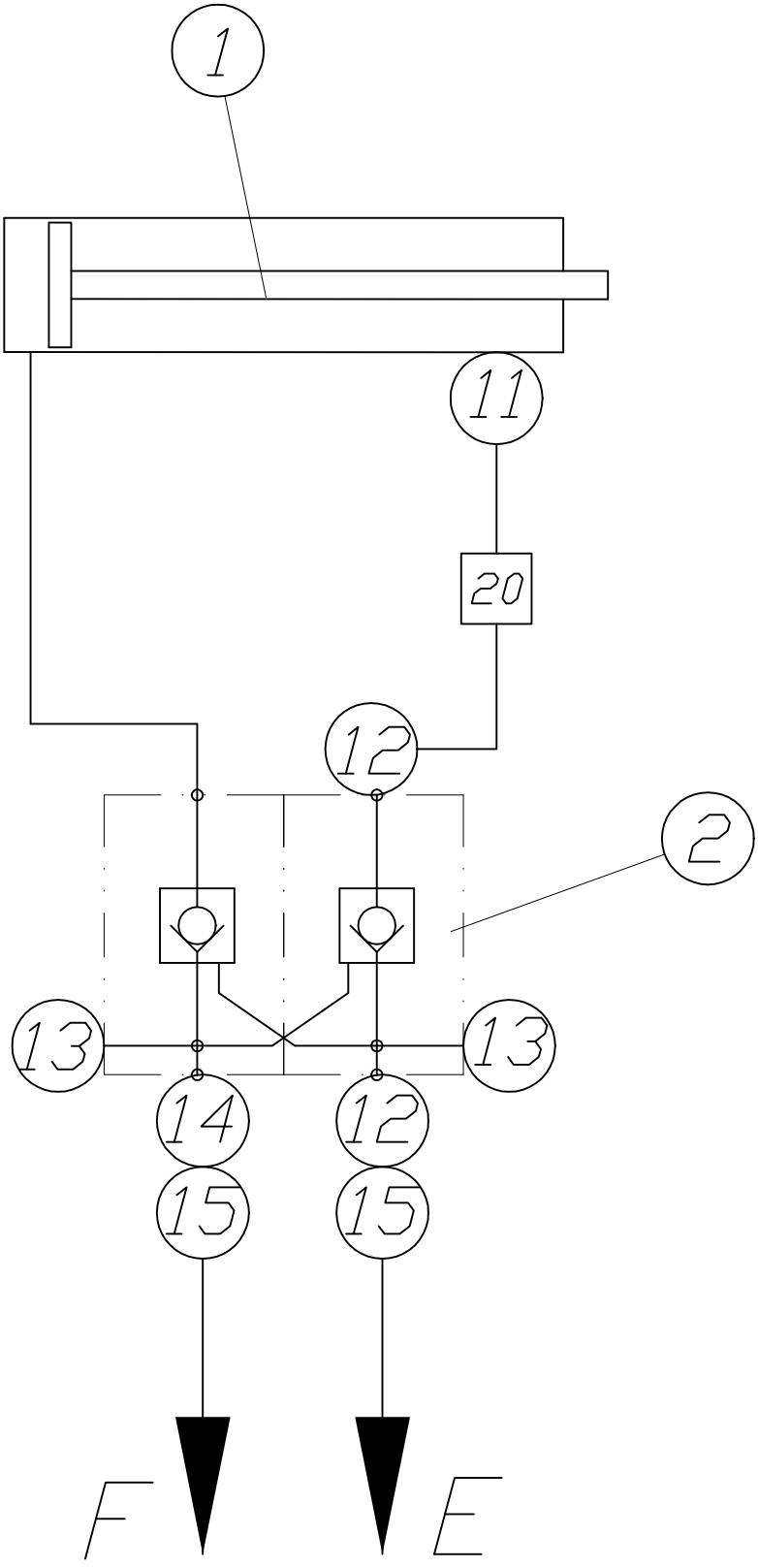

PARTS LIST

23.06.05 08:16:14

part list	description	created	index	valid from	valid to
B632037	swing cylinder cpl.	11.11.03 Mi	a	02.06.05	

pos	description stock	ident-no dimensions	DIN material	index	weigth Kg	quantity unit
1	swing cylinder 100x 60 x 475 42XXT own parts list	WAI107364				1,00 Stk
2	pilot operated twin check valve	WAI106410				1,00 Stk
11	banjo coupling L12 RD	wai103684				1,00 Stk
12	straight male stud couplings L12D	WAI100548				2,00 Stk
13	locking screw G 3/8	WAI100521				2,00 Stk
14	straight male stud couplings L12R 1.2 own parts list	WAI107456			0,13	1,00 Stk
15	swivel elbow L12	WAI103794				2,00 Stk
20	hydr. pipe 12 x 2	WAI102022			0,49	0,30 Mtr

Transportsicherung vorne
transport safety device front

B 63 9 197b

Waitzinger
Baumaschinen GmbH

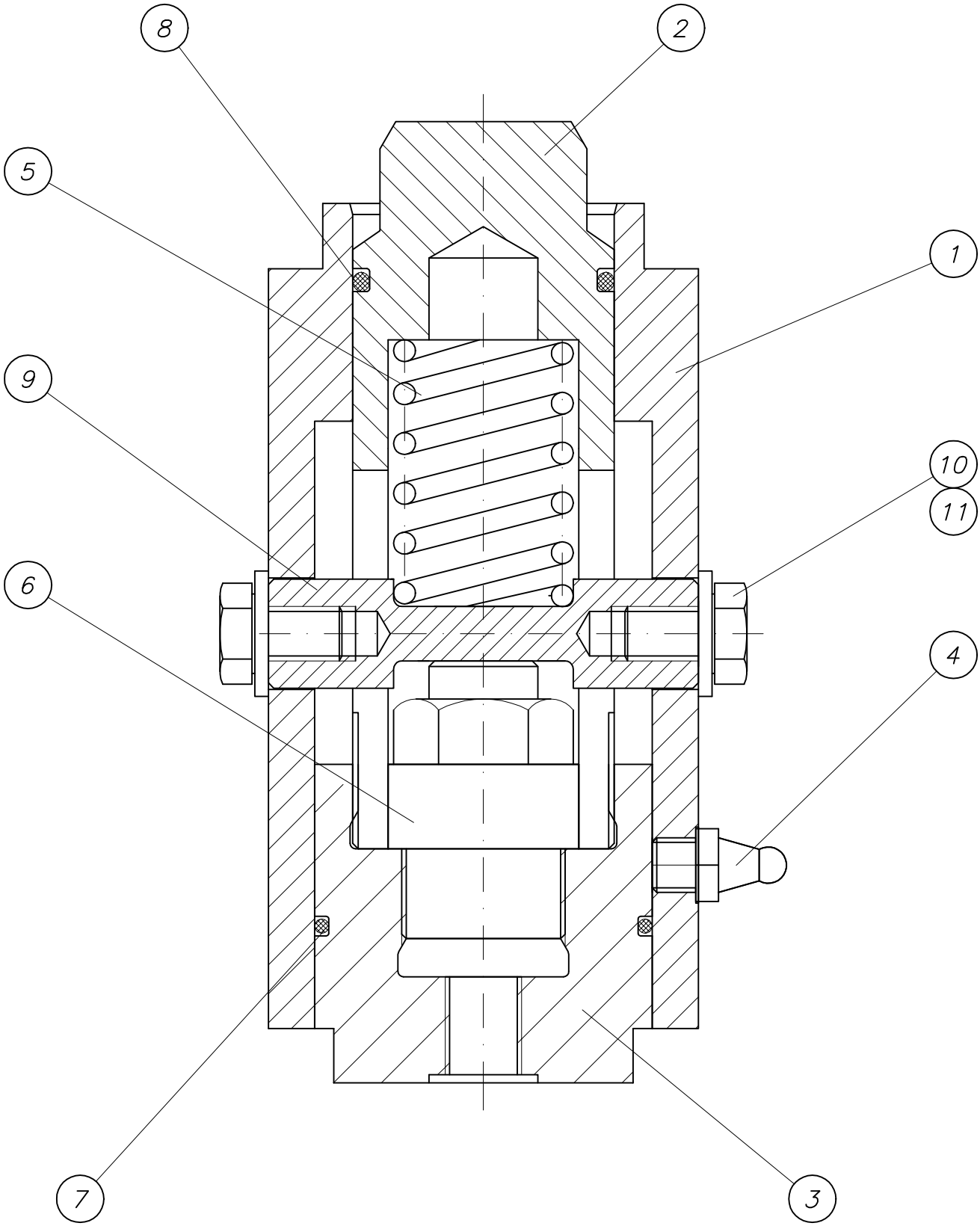

17.10.2003

PARTS LIST

23.06.05 08:21:11

part list	description	created	index	valid from	valid to
B639197	transport savety device	04.12.00 ek	b	14.10.03	

pos	description stock	ident-no dimensions	DIN material	index	weigth Kg	quantity unit
1	pipe	B639198 Ro D82.5x20x155	2448 St52-3	c 16.02.04		1,00 Stk
2	bolt	B639199 Rd 50x135	1013 St52-3	a 17.09.03		1,00 Stk
3	nut	B639201 Rd 70	1013 St52-3	a 17.12.02		1,00 Stk
4	grease nipple H1 M10 X 1 DIN 71412	WAI100805			0,01	1,00 Stk
5	pressure spring	WAI106537				1,00 Stk
6	cylinder	WAI106536				1,00 Stk
7	O-ring 56.74x3	WAI106538				1,00 Stk
8	O-ring	WAI101260				1,00 Stk
9	bolt	B639215 Rd 20x80	1013 S355J2G3		0,15	1,00 Stk
10	hexagon bolt M10 x 16	WAI102886				2,00 Stk
11	washer 10.5	WAI101559			0,00	2,00 Stk

Transportsicherung hinten
transport safety device rear

B 63 9 207b

Waitzinger
Baumaschinen GmbH

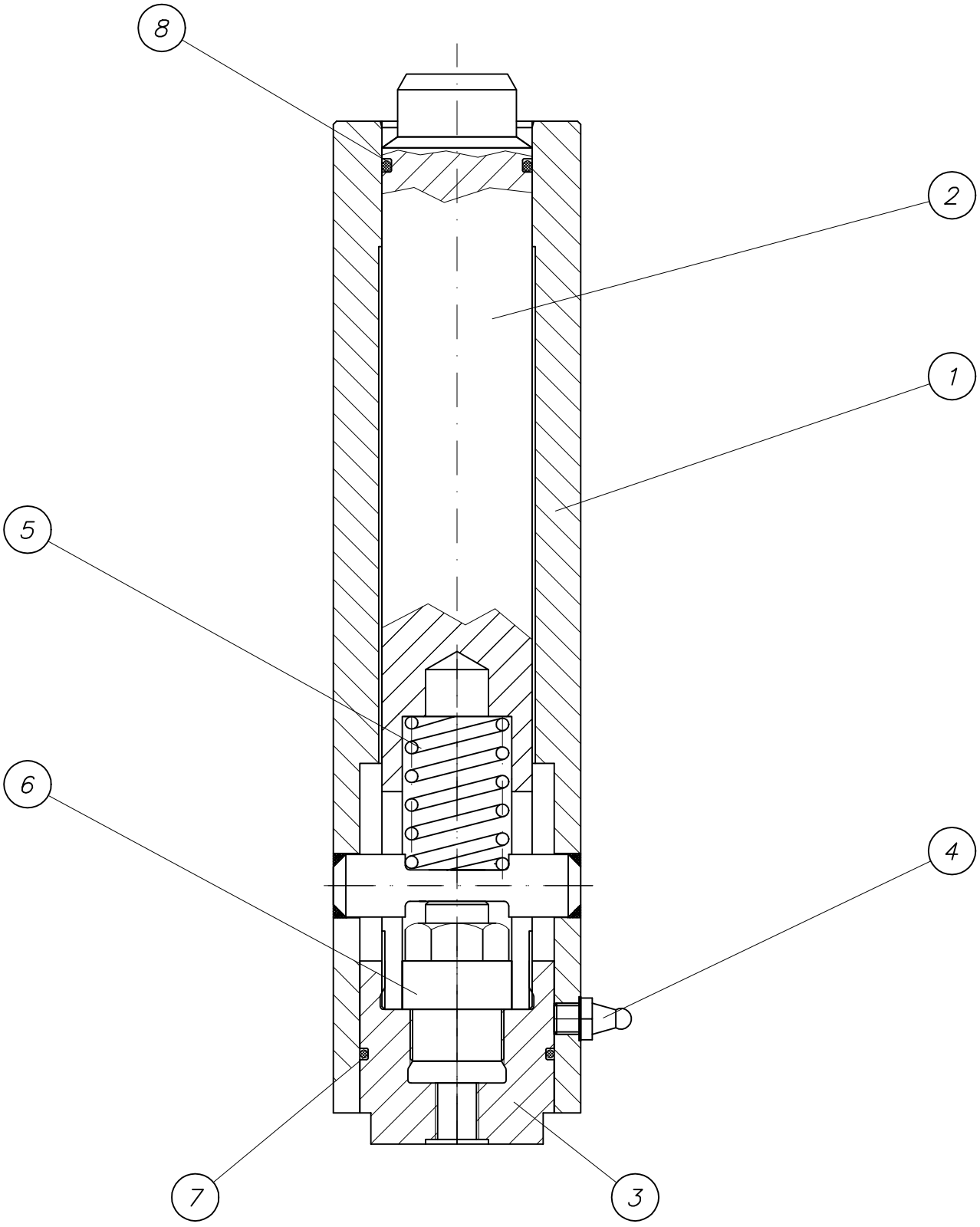

25.10.2004

PARTS LIST

23.06.05 08:20:46

part list	description	created	index	valid from	valid to
B639207	transport savety device	04.12.00 ek	b	20.10.04	

pos	description stock	ident-no dimensions	DIN material	index	weigth Kg	quantity unit
1	pipe cpl. own parts list	B639218				1,00 Stk
2	bolt	B639209 Rd 50x320	1013 St52-3	b 20.10.04		1,00 Stk
3	nut	B639201 Rd 70	1013 St52-3	a 17.12.02		1,00 Stk
4	grease nipple H1 M10 X 1 DIN 71412	WAI100805			0,01	1,00 Stk
5	pressure spring	WAI106537				1,00 Stk
6	cylinder	WAI106536				1,00 Stk
7	O-ring 56.74x3	WAI106538				1,00 Stk
8	O-ring	WAI101260				1,00 Stk

Übersicht B 70 - B 79

over view B 70 - B 79

Waitzinger
Baumaschinen GmbH

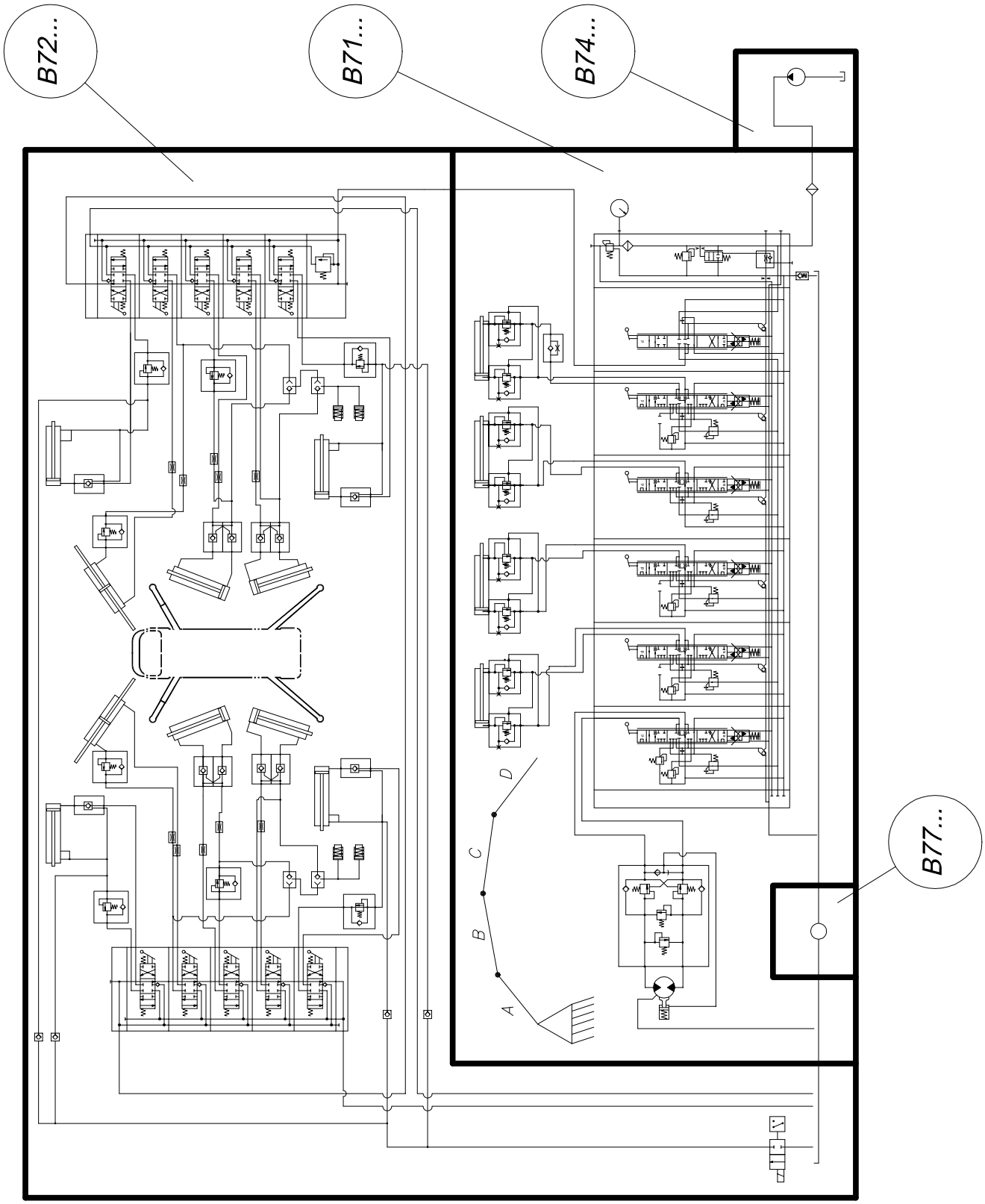

Verrohrungsplan Abstützung
piping diagram outrigger

B 72 2 010 1

Waitzinger
Baumaschinen GmbH

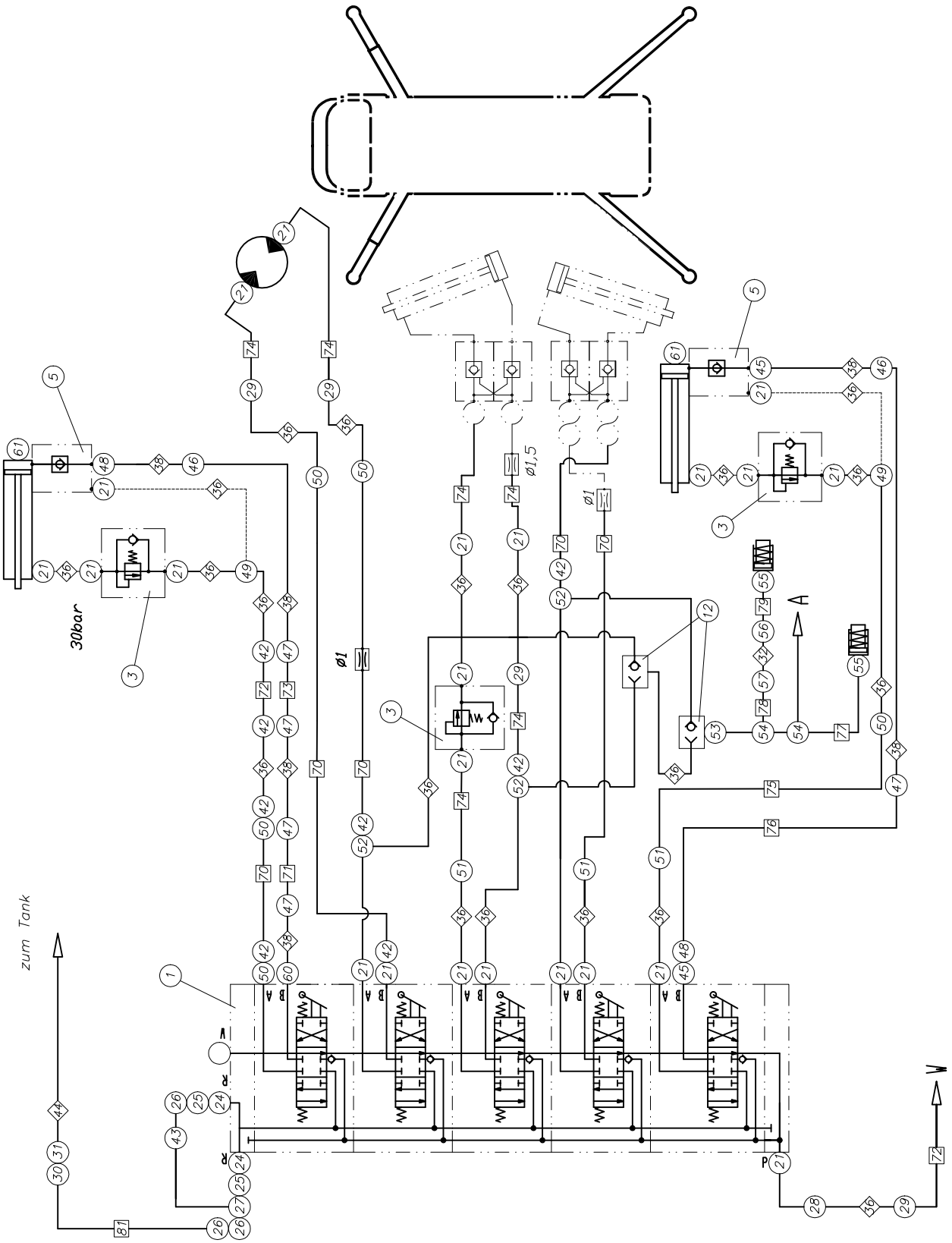

27.11.2003

Verrohrungsplan Abstützung
piping diagram outrigger

B 72 2 010 2

Waitzinger
Baumaschinen GmbH

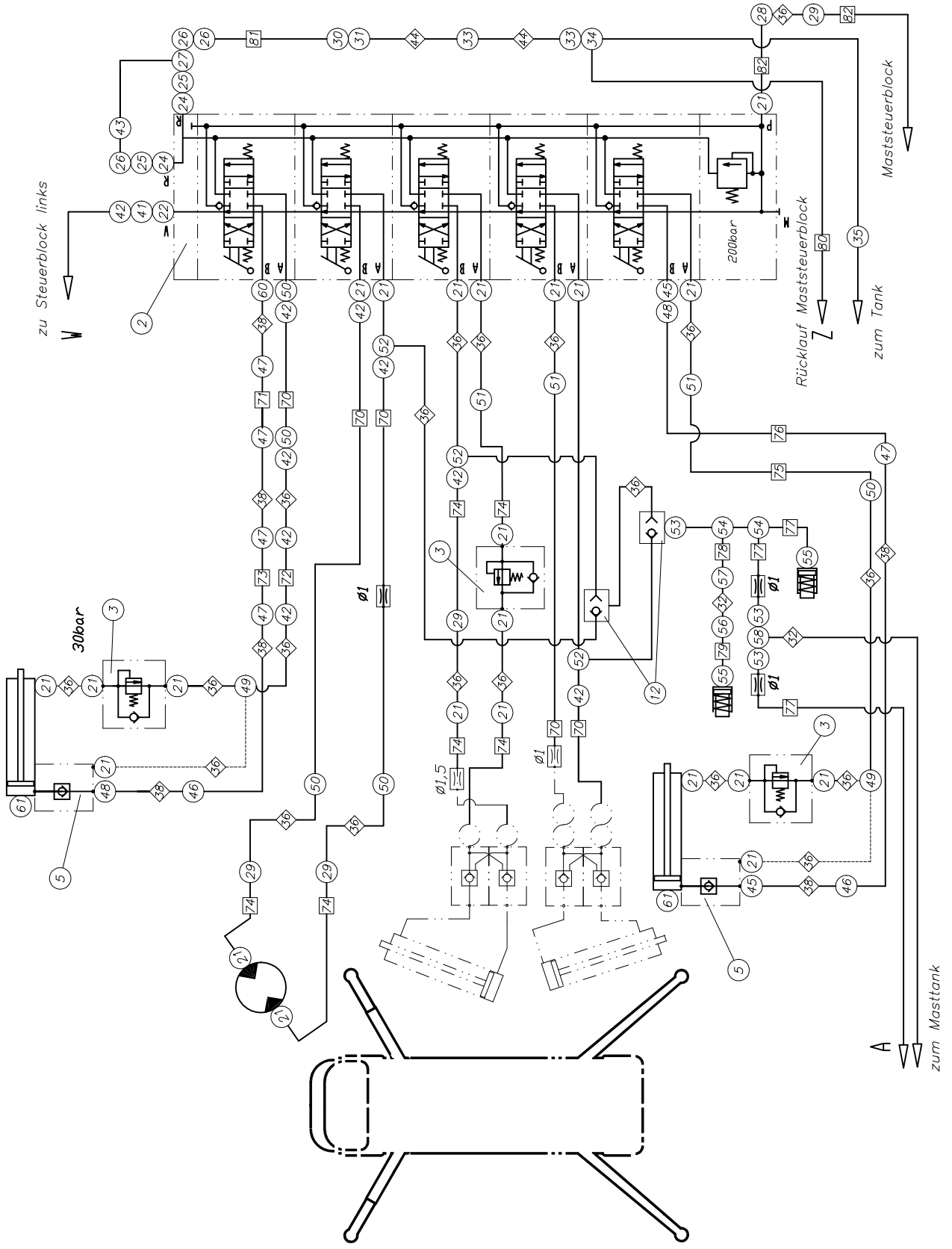

Verrohrungsplan Abstützung
piping diagram outrigger

B 72 2 010 3

Waitzinger
Baumaschinen GmbH

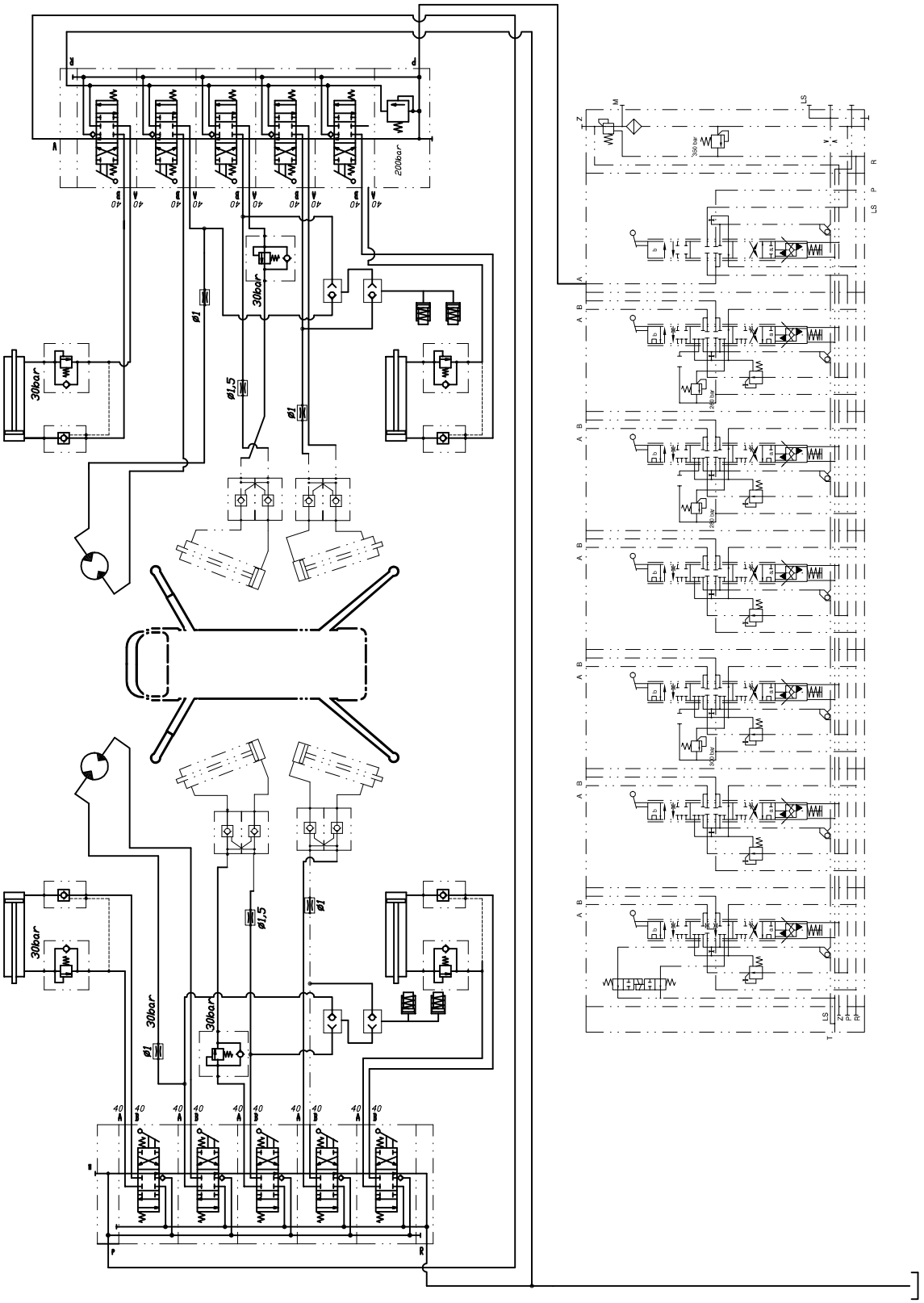

27.11.2003

PARTS LIST

17.11.05 10:07:14

part list	description	created	index	valid from	valid to
B722010R1	piping diagram 42XXT boom	04.04.03 hbk			

pos	description stock	ident-no dimensions	DIN material	index	weigth Kg	quantity unit
3	valve SVC 46 F-30	WAI106335				8,00 Stk
4	pilot operated twin check valve	WAI106410				4,00 Stk
5	valve RHC 31	WAI106698				4,00 Stk
12	valve WV 8-S	WAI105212				4,00 Stk
13	socket head port plugs M24x1.5	WAI106699			0,04	4,00 Stk

Verrohrungsplan Mastbock kpl.

piping diagram boom base cpl.

B 72 2 015b 1

Waitzinger
Baumaschinen GmbH

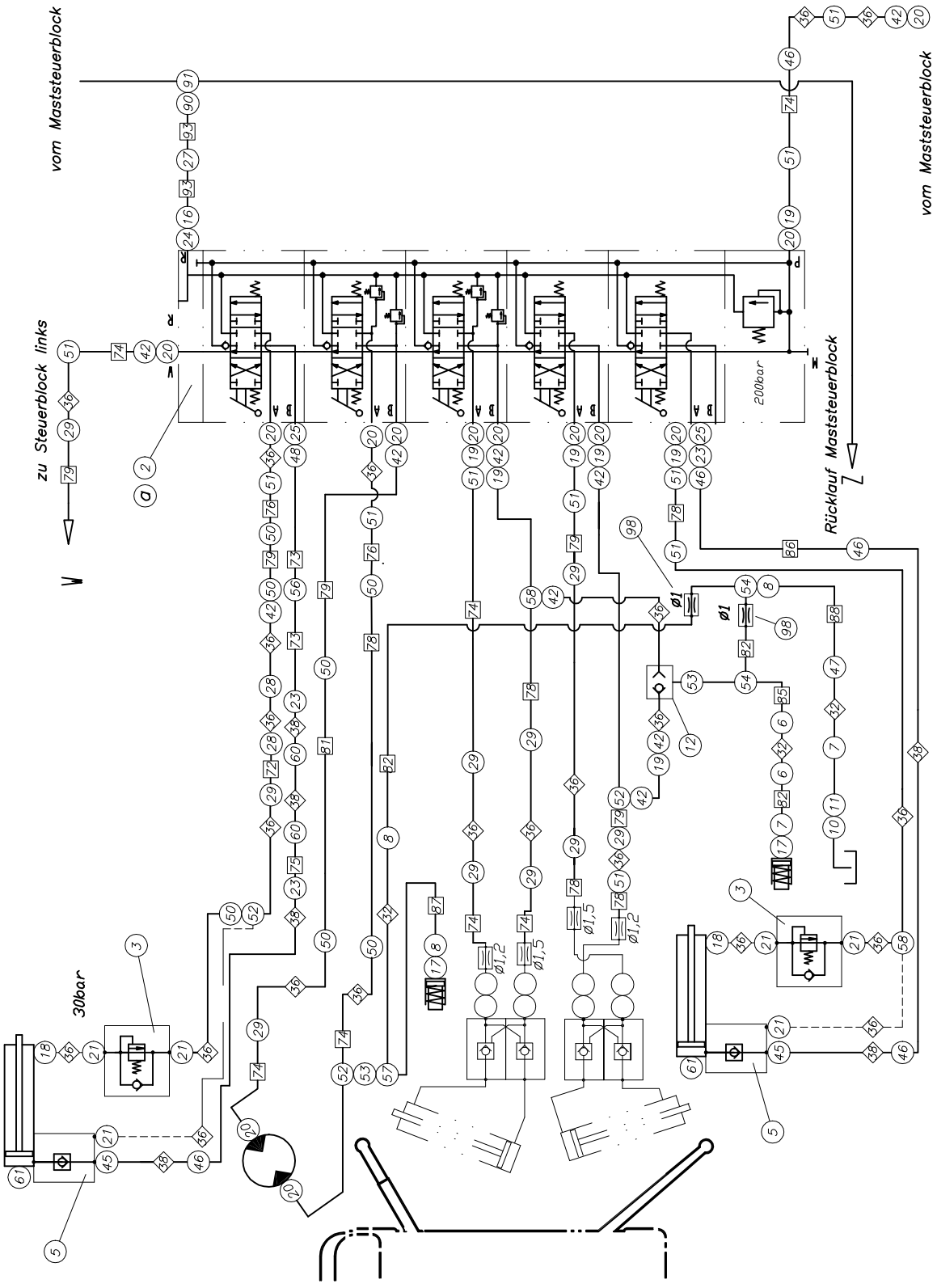

Verrohrungsplan Mastbock kpl.

piping diagram boom base cpl.

B 72 2 015b 2

Waitzinger
Baumaschinen GmbH

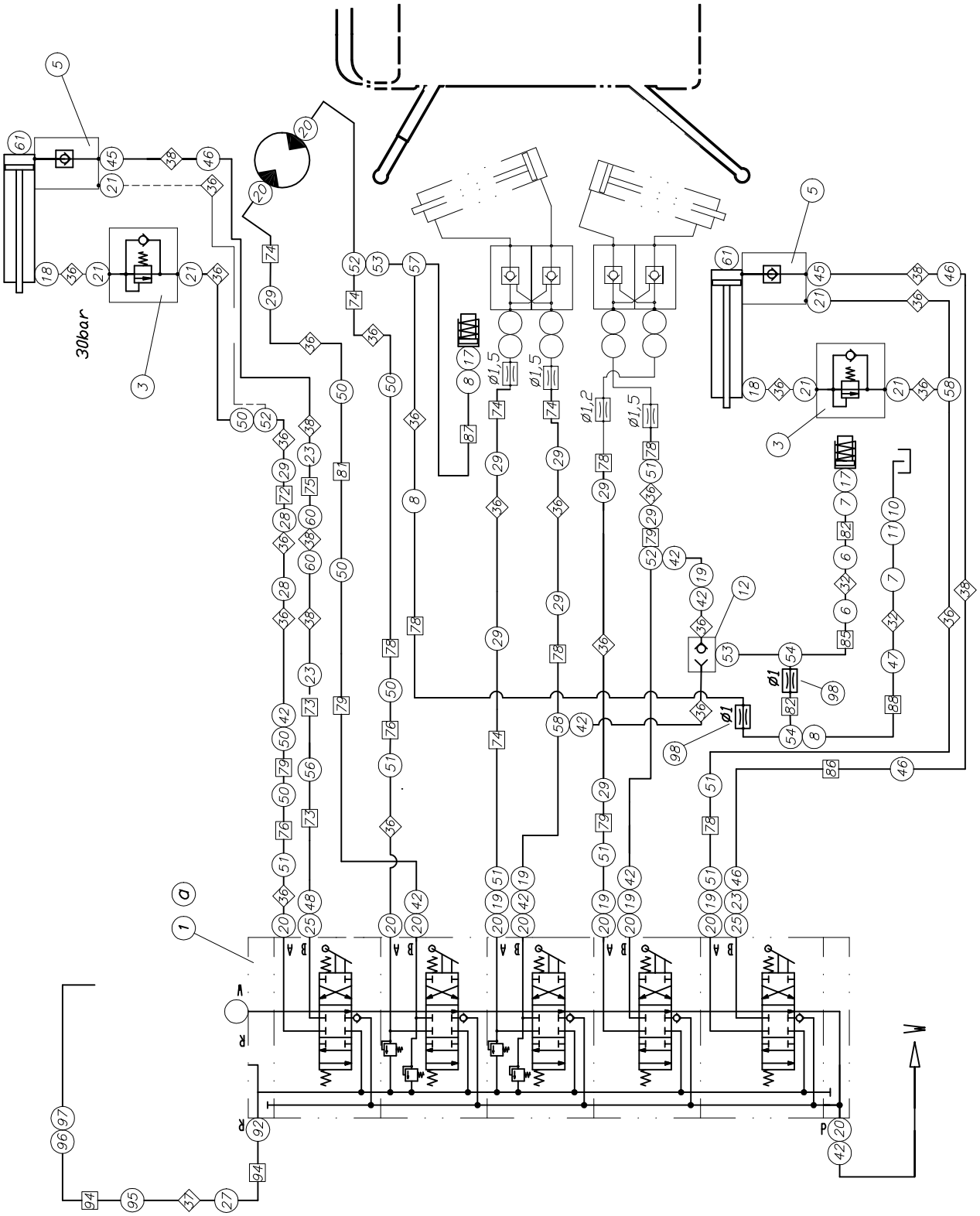

Verrohrungsplan Mastbock kpl.

piping diagram boom base cpl.

B 72 2 015b 3

Waitzinger
Baumaschinen GmbH

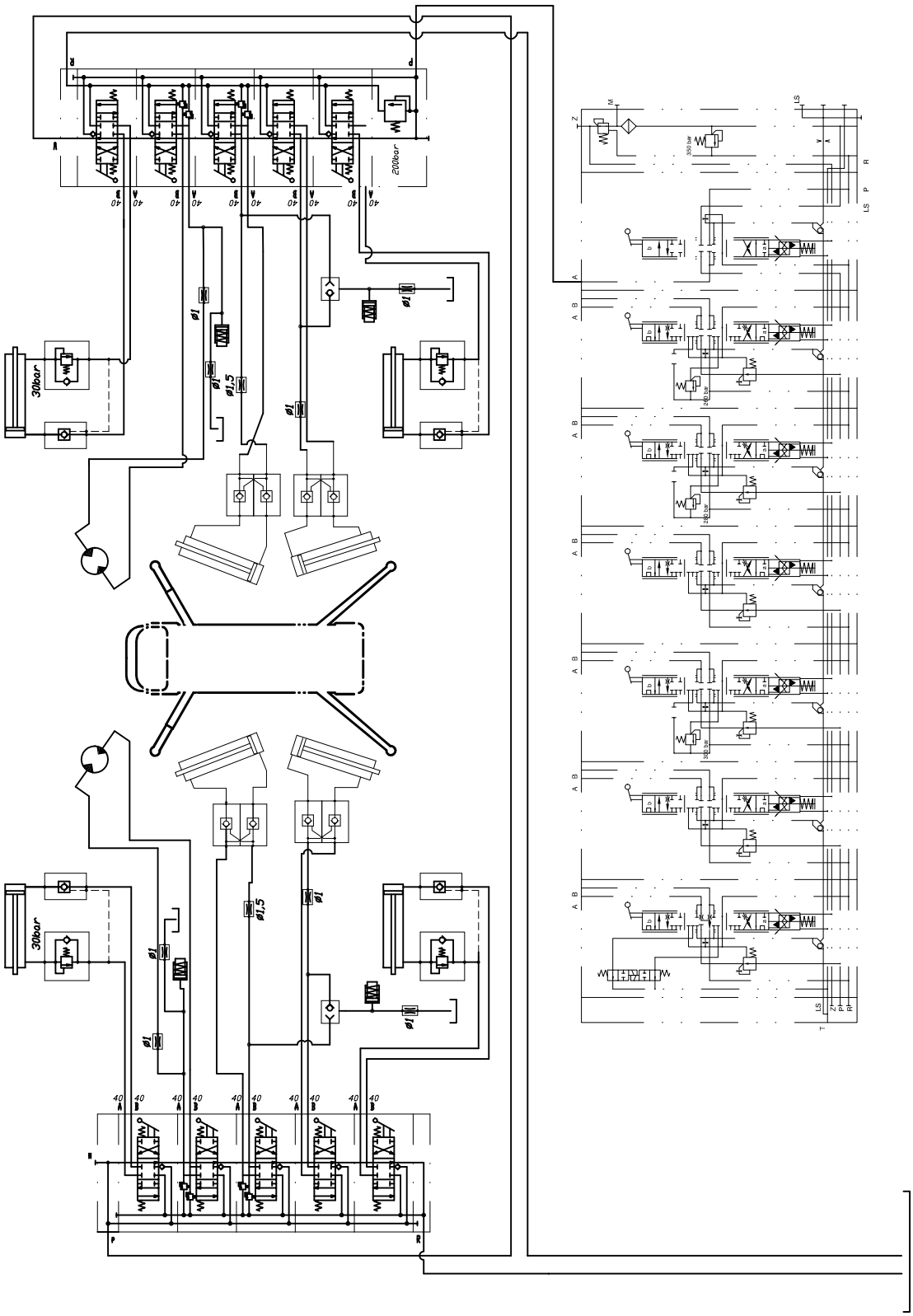

15.06.2005

PARTS LIST

17.11.05 10:05:54

part list	description	created	index	valid from	valid to
B722015R1	piping diagram 42XXT pedestal short	15.11.05 TECHNIK			

pos	description stock	ident-no dimensions	DIN material	index	weigth Kg	quantity unit
18	throttlefree banjo elbows L12 R	WAI103763				2,00 Stk
21	straight male stud couplings L12 3/8"	WAI103741				6,00 Stk
23	straight couplings L 15	WAI100828			0,14	4,00 Stk
28	bulkhead elbows L12	WAI103782				2,00 Stk
29	straight couplings L12	WAI100603				2,00 Stk
36	hydr. pipe 12 x 2	WAI102022			0,49	8,00 Mtr
38	hydr. pipe 15 x 2	WAI101717			0,65	8,00 Mtr
42	swivel elbow L12	WAI100590				2,00 Stk
45	straight male stud couplings L15-G 3/8"	WAI103704				2,00 Stk
46	elbow couplings L15	WAI100829				2,00 Stk
50	bulkhead coupling L12	WAI101384				4,00 Stk
52	swivel barrel tee L12	WAI101325				2,00 Stk
60	bulkhead elbows L15	WAI101390				2,00 Stk
72	hose DN10x2600	WAI108616				2,00 Stk
75	hose DN12x2600	WAI108617				2,00 Stk

PARTS LIST

25.10.05 11:23:01

part list	description	created	index	valid from	valid to
B741031	hydraulic pump A11VO40/4496	04.04.02 ek			

pos	description stock	ident-no dimensions	DIN material	index	weigth Kg	quantity unit
1	pump A11VO40DRS/10L-NSC12N00 own parts list	WAI104346			31,60	1,00 Stk
2	O-ring	WAI104873				1,00 Stk
3	cheese head screw M 12 x 35	WAI102895				2,00 Stk
4	spring washer A12	WAI103113				2,00 Stk

Übersicht B 80 - B 99

over view B 80 - B 99

Waitzinger
Baumaschinen GmbH

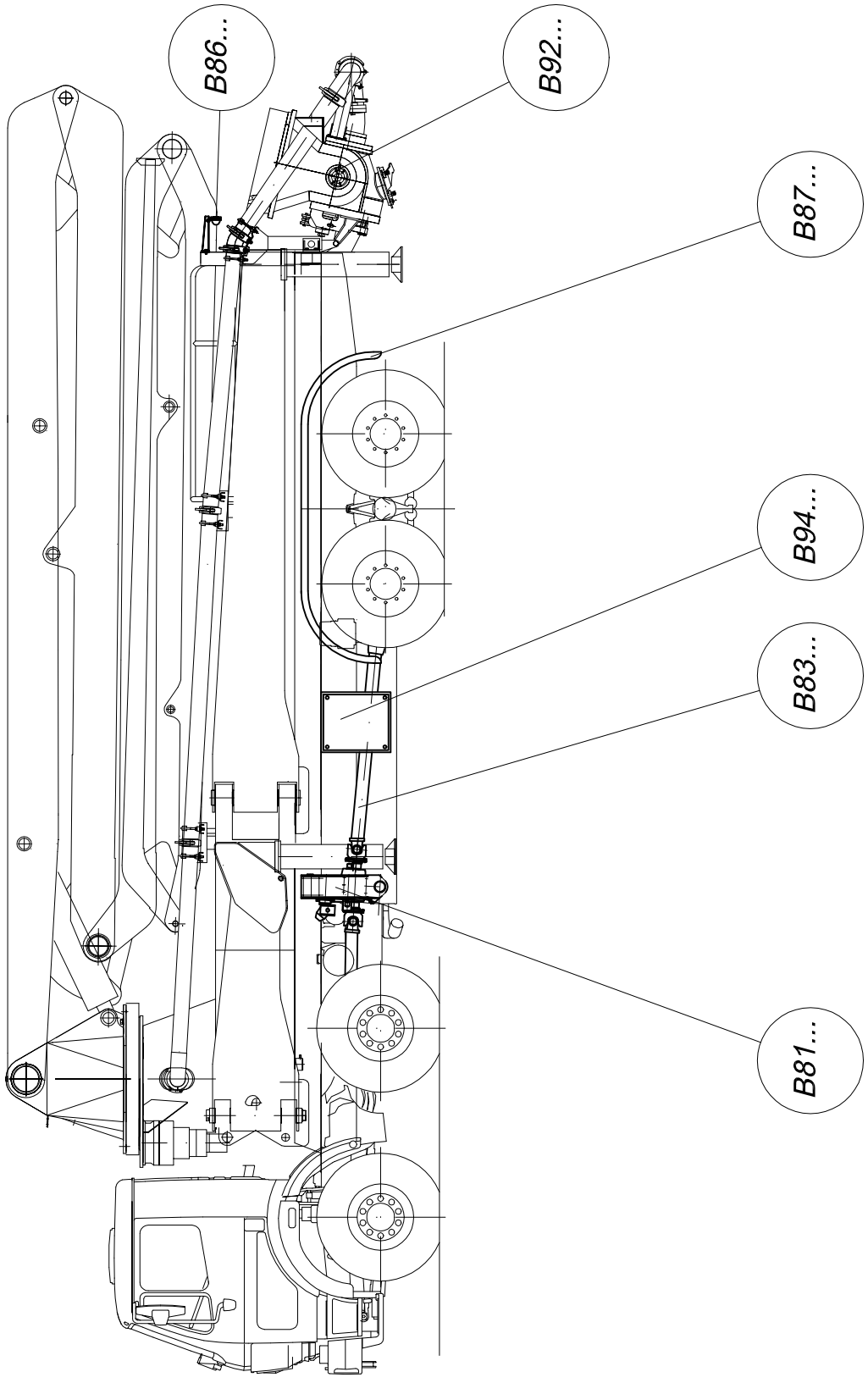

PARTS LIST

25.10.05 11:25:21

part list	description	created	index	valid from	valid to
B814088R1	distributor gear box 4496.xx	09.06.04 HF			

pos	description stock	ident-no dimensions	DIN material	index	weigth Kg	quantity unit
1	PTO gearbox 4400. own parts list	WAI107195				1,00 Stk
2	buffer	WAI103414				4,00 Stk
3	hexagon bolt M 20 x 50	WAI102860				14,00 Stk
6	sealing ring 165 x 5	WAI102903				1,00 Stk
7	O-ring	WAI105771				1,00 Stk
10	conical spring washer	WAI102110			0,05	11,00 Stk
11	hexagon bolt M8 x 25 DIN 933 8.8	WAI101621				16,00 Stk
12	stop nut M8 DIN985 8. VERZ.	WAI102111			5,00	16,00 Stk
13	washer 8.4	WAI101625				16,00 Stk

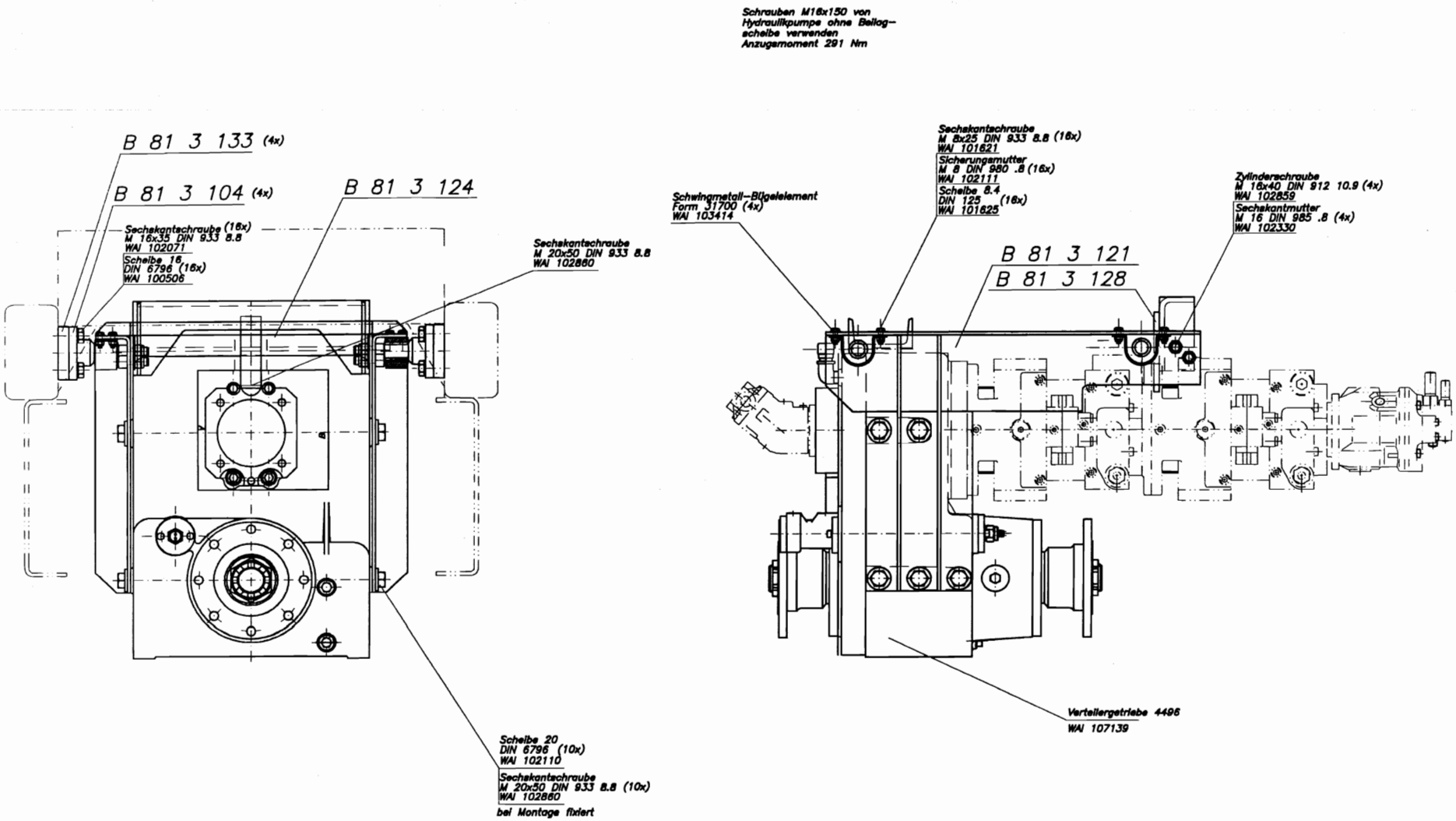

Waitzinger Baumaschinen Vertrieb und Service GmbH

Freimaßtoleranz DIN 7168 mittel

Maßstab 1:5

eigene Stückliste

	Datum	Name
Bearb.	14.11.2002	M
Gepr.		
Norm		

Getriebeeinbau 4496

Änderung nur auf CAD

B 81 4 077

Blatt

Ohne unsere Genehmigung darf diese Zeichnung weder vervielfältigt noch dritten Personen oder Konkurrenzfirmen mitgeteilt werden.(Paragraph 1 Nr.3 des Urheberrechtsgesetzes vom 14.09.1901)

Zust.	Änderung	Datum	Name
a	siehe B 814077.doc	03.03.03	M

Ursprr.

Ers. für

Ers. durch

pos	description	ident-no	DIN	change-index	chg. dat	weight	quant
	stock	dimensions	material	valid from	val.unt.		unit
5	PTO gearbox 4496.	WAI107139				0.000	1.00
	own parts list						Stk
6	buffer	WAI103414				0.000	4.00
							Stk
7	hexagon bolt M8 x 25 DIN 933 8.8	WAI101621				0.000	16.00
							Stk
11	hexagon bolt M 20 x 50	WAI102860				0.000	11.00
							Stk
12	stop nut M8 DIN985 8. VERZ.	WAI102111				5.000	16.00
							Stk
15	washer 8.4	WAI101625				0.000	16.00
							Stk
17	conical spring washer	WAI102110				0.045	11.00
							Stk
18	sealing ring 165 x 5	WAI102903				0.000	1.00
							Stk
19	O-ring	WAI105771				0.000	1.00
							Stk

description	drawing-no	ID	date	chg.-index	chg-date	val.from	val.unti
distributor gear box 4496.xx	B814077R1	hbk	29.01.04				

®ANTONELLI

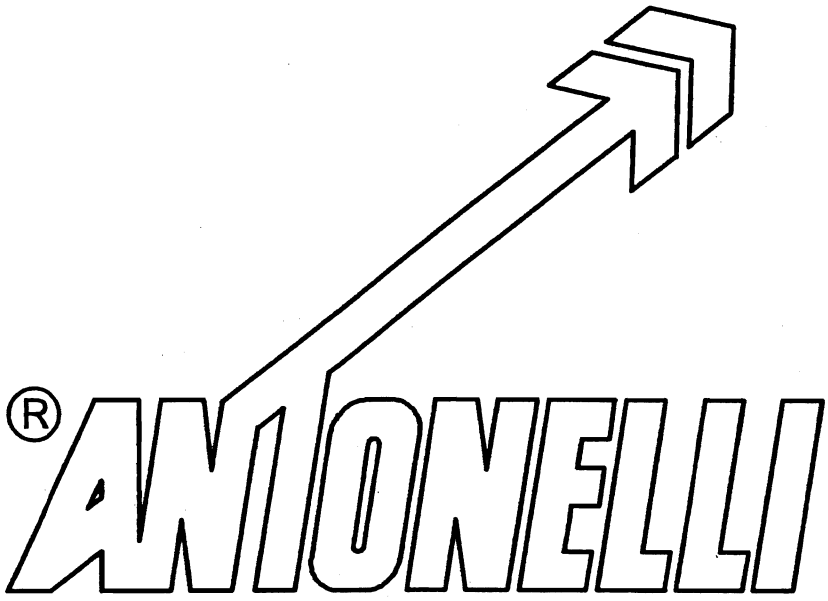

ARM PACKET FOR

CONCRETE DISTRIBUTOR BOOM

AZ-42.5/125

MANUAL VALIDITY
BOOM AZ-42.5/125
SERIAL N° 4713

MAN.N° 94I EDIZ.N° 1 (28/10/2002)

01.0 - IDENTIFICATION DETAILS

CONCRETE BOOM
TYPE: AZ-42.5/125
SERIAL N°: 4713

01.0.1 - BOOM IDENTIFICATION PLATE
The boom identification plate of fig. 1 is located on the turret structure as from pos. 6 of Pag. 8.

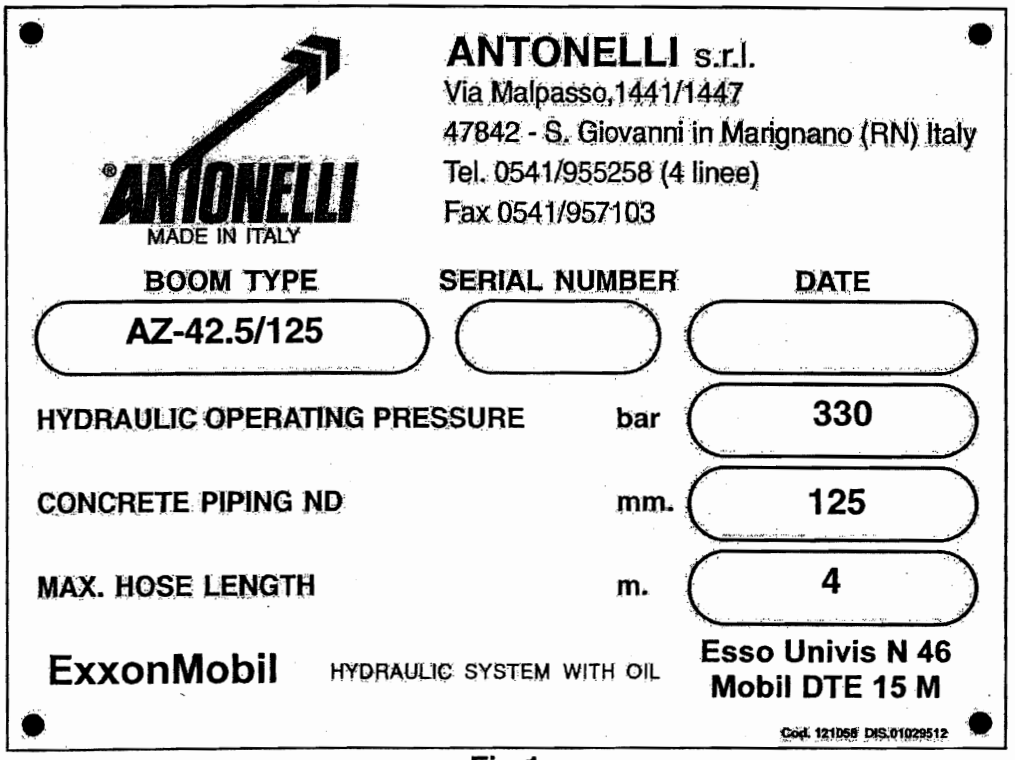

Fig.1

01.0.2 - PUNCHING OF BOOM
The manufacturer's name and the boom serial number are stamped near the boom identification plate on the edge of the base bearing support and on the upper steel sheet of the 1st section.

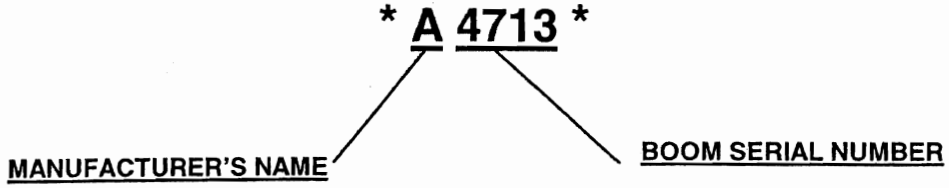

01.2 - BOOM OPENING AREA

The figure below shows the boom opening area.
The need for large opening angles (so as to be able to work close to the turret) does not mean it is possible to work with the terminal pipe in all reachable positions.

WARNING!

It is forbidden to work with the end section of the pipe further back than the head rotation vertical axis.

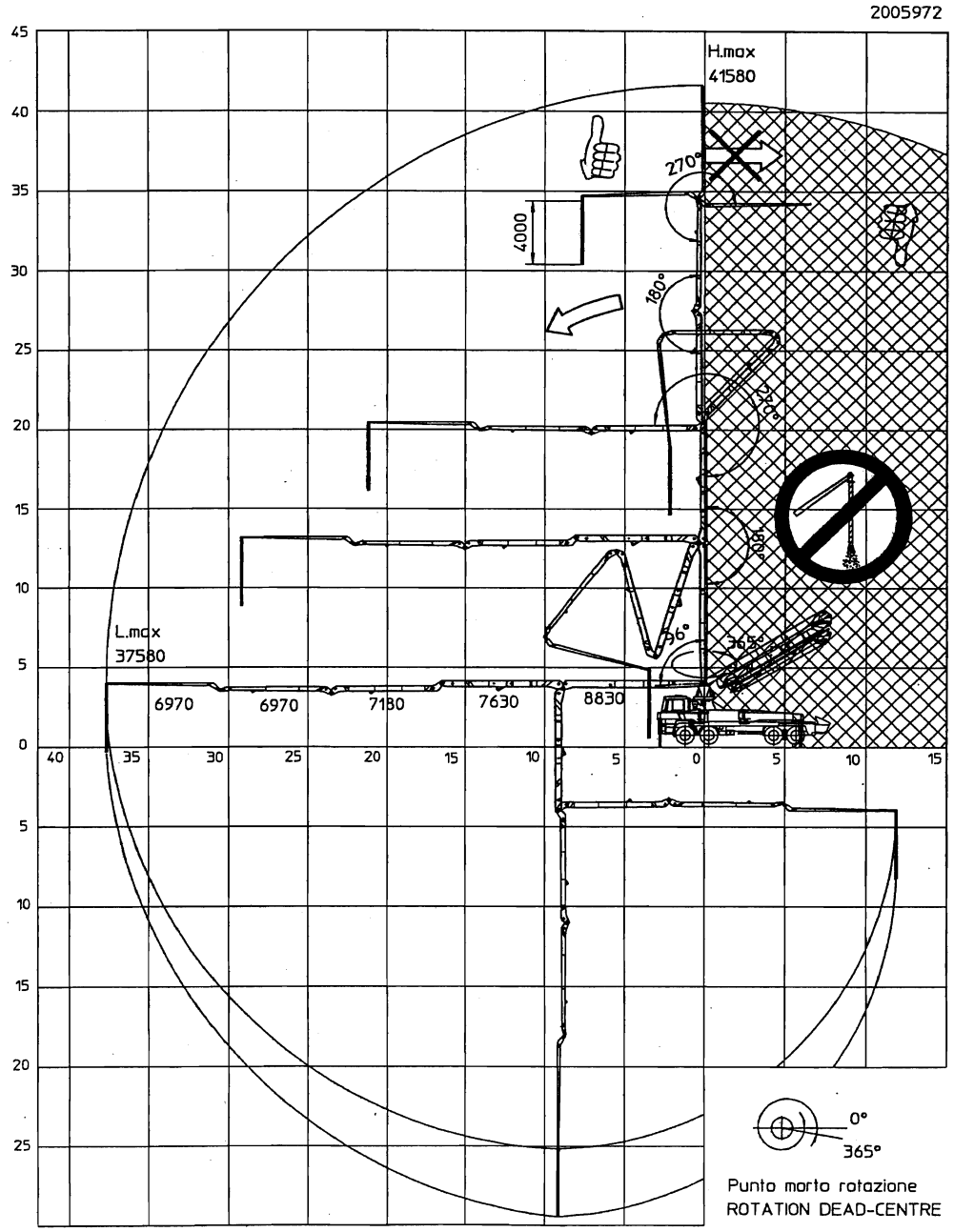

03.6 - TABLE OF PRESSURES AND MANOEUVRE TIMES

When the boom is fitted on the vehicle, a final test will have to be performed to check pressures and manoeuvre times of each boom section. The above test must be performed using hot oil (oil temp.: 50°C) and with the hydraulic pump operating at full speed. The maximum pressures shown must correspond to the values indicated in the following tables with a tolerance equal to ± 2%. The manoeuvre times shown must correspond to the values indicated in the following tables with a tolerance equal to ± 15%; in the event of the values being below 15%, it is necessary to check if the flow capacity of the hydraulic pump of the distributor sections and the throttles inside the check valves correspond with the values shown on the table. Action will have to be taken if the maximum pressure and manoeuvre times at top speed are outside tolerance limits.

WARNING! ⚠

The boom should never be operated at pressures or at speeds higher than those set out in the beginning by Antonelli s.r.l and quoted below.

SYSTEM FEATURES AND SWIVEL SETTING PRESSURES

TAB.1:

DESCRIPTION	PRESSURE (BAR)
Swivel	120
Hydraulic distributor max. inlet pressure	350
Hydraulic distributor max. outlet pressure	10
Pressure max pump Load Sensing	330
Max. hydrostatic pump flow rate	80 l/1'

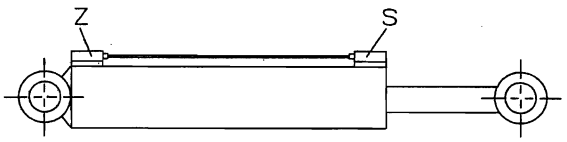

SETTING PRESSURES OF BOOM VALVES AND DISTRIBUTOR SECTIONS

TAB. 2:

BOOM HYDR. CYLINDER POS.	ARTIC. A		ARTIC. B		ARTIC. C		ARTIC. D		ARTIC. E	
CHECK VALVE POSITION	Z	S	Z	S	Z	S	Z	S	Z	S
Check valve throat d. (mm)	2.5	/	/	/	2	/	/	/	/	/
Check valve pressures (bar)	310*	340*	310*	340*	310*	340*	280*	310*	280*	310*
Pressures of distributor sect. (bar)	/	/	300	/	/	/	280	/	260	/
* valves adjusted on bench when they start to open and without counterpressure at the discharge										

MANOEUVRE TIMES

TAB.4 - BOOM:

BOOM SECTIONS	Section Artic. A		Section Artic. B		Section Artic. C		Section Artic. D		Section Artic. E		Right Swivel	Left Swivel
	Open.	Clos.	Open.	Clos.	Open.	Clos.	Open.	Clos.	Open.	Clos.	1 Rev.	1 Rev.
TIME (sec.)	104	104	145	145	140	150	68	68	55	55	212	212

10.1 - GLOSSARY OF COMPONENTS

13.2 - REVOLVING HEAD
15.1 - HYDR. CYLINDER (1ST BOOM OP.)
15.2 - HYDR. CYLINDER (2ND BOOM OP.)
15.3 - HYDR. CYLINDER (3RD BOOM OP.)
15.4 - HYDR. CYLINDER (4TH BOOM OP.)
15.5 - HYDR. CYLINDER (5TH BOOM OP.)
16.6 - CHECK VALVE OF HYDRAULIC CYL.
17.1 - 1st BOOM SECTION
17.2 - 2nd BOOM SECTION
17.3 - 3rd BOOM SECTION
17.4 - 4th BOOM SECTION
17.5 - 5th BOOM SECTION

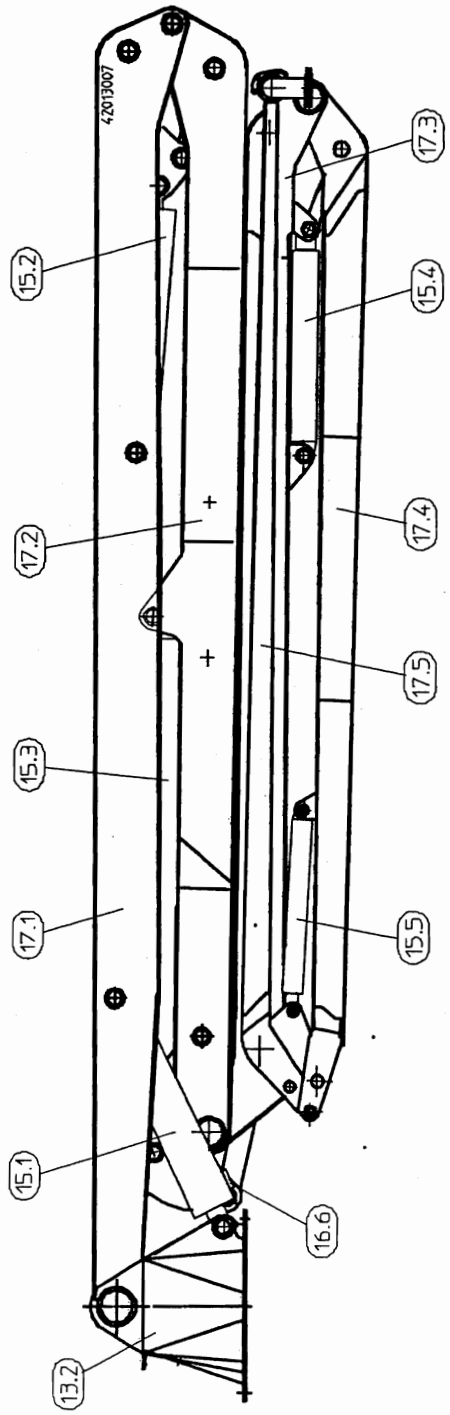

ANTONELLI

DESCRIZIONE
AZ-42.5/125

11

P	CODE	Q	DESCRIZIONE	DESCRIPTION	DIMENSIONS/STANDARDS
1	121092	2	TARGHETTA	PLATE	
2	121093	2	TARGHETTA	PLATE	
3	121024	2	TARGHETTA	PLATE	
4	121015	2	TARGHETTA	PLATE	
5	121106	2	TARGHETTA	PLATE	
6	121058	1	TARGHETTA	PLATE	INGLESE
7	120137	2	TARGHETTA	PLATE	
8	120138	2	TARGHETTA	PLATE	
9	120139	2	TARGHETTA	PLATE	
10	120157	2	TARGHETTA	PLATE	
11	121003	2	TARGHETTA	PLATE	

ANTONELLI	SWIVEL HEAD AZ-42.5/125	13.2

P	CODE	Q	DESCRIZIONE	DESCRIPTION	DIMENSIONS/STANDARDS
	284579	**1**	**Testata girevole**	**Swivel head**	
1		1	Struttura base	Base structure	
2	31546	1	Perno	Pin	P-1154/A
3	180167	1	Ghiera	Ring nut	Dis. 185942
4	31179	1	Perno	Pin	P-0910
5	121201	1	Copiglia	Split pin	D.10*120
6	170012	1	Ingrassatore	Lubricator	A/M10*1
7	90727	46	Vite alta resistenza	Screw	TCCE M27*150 10.9
8	100125	46	Rosetta elastica	Elastic washer	D.27 UNI 5714
9	90421	46	Dado	Nut	M27*3 UNI 5587
10	90421	10	Vite alta resistenza	Screw	TE M12*40*1.75 UNI 5737
11	100132	10	Rosetta alta resistenza	Washer	D.12

ANTONELLI	HYDRAULIC CYLINDER P-204/A UF AZ-42.5/125	15.1

P	CODE	Q	DESCRIZIONE	DESCRIPTION	DIMENSIONS/STANDARDS
	43053U	**1**	**Cilindro idraulico P-204/A UF**	**Hydr. cylinder P-204/A UF**	
1		1	Cilindro	Cylinder	
2		1	Stelo	Rod	
3		1	Testina ant. interna	Front head int.	
4		1	Testina ant. esterna	Front head ext.	
5		1	Guarnizione	Gasket	OR-297
6		1	Guarnizione	Gasket	SWP 130145
7		1	Guarnizione	Gasket	B-570511/NEI
8		1	Guarnizione	Gasket	BRS 680
9		1	Guarnizione	Gasket	ORD 680
10	20635	1	Boccola	Bushing	BR MB 130100 DU
11		1	Guarnizione	Gasket	DSM 1024925/1A
12		1	Guarnizione	Gasket	ORD 860
13		1	Guarnizione	Gasket	ORD-377
14		1	Guarnizione	Gasket	E/GT 260/255*9,7 102A
15		1	Pistone	Piston	
16		1	Vite	Screw	STCE M10
17	20483	2	Boccola	Bushing	BR MB 100115 DU
18		1	Distanziere	Spacer	L=90
19		2	Boccola	Bushing	BR MB 10060 DU
20		1	Distanziere	Spacer	L=40
	1973	1	Kit guarnizioni	Kit gaskets	

ANTONELLI	HYDRAULIC CYLINDER P-205/A UF AZ-42.5/125	15.2

P	CODE	Q	DESCRIZIONE	DESCRIPTION	DIMENSIONS/STANDARDS
	43047U	**1**	**Cilindro idraulico P-205/A UF**	**Hydr. cylinder P-205/A UF**	
1		1	Cilindro	Cylinder	
2		1	Stelo	Rod	
3		1	Testina ant. interna	Front head int.	
4		1	Testina ant. esterna	Front head ext.	
5		1	Guarnizione	Gasket	OR-4900
6		1	Guarnizione	Gasket	SWP 130145
7		1	Guarnizione	Gasket	B-570511/NEI
8		1	Guarnizione	Gasket	BRS 680
9		1	Guarnizione	Gasket	ORD 680
10	20635	1	Boccola	Bushing	BR MB 130100 DU
11		1	Guarnizione	Gasket	DSM 1024925/1A
12		1	Guarnizione	Gasket	ORD 860
13		1	Guarnizione	Gasket	ORD-377
14		1	Guarnizione	Gasket	E/GT 260/255*9,7 102A
15		1	Pistone	Piston	
16		1	Vite	Screw	STCE M10
17	20483	2	Boccola	Bushing	BR MB 100115 DU
18		1	Distanziere	Spacer	L=90
19		2	Boccola	Bushing	BR MB 10060 DU
	1974	1	Kit guarnizioni	Kit gaskets	

ANTONELLI	HYDRAULIC CYLINDER P-211 UF AZ-42.5/125	15.3

P	CODE	Q	DESCRIZIONE	DESCRIPTION	DIMENSIONS/STANDARDS
	43055U	**1**	**Cilindro idraulico P-211 UF**	**Hydraulic cylinder P-211 UF**	
1		1	Cilindro	Cylinder	
2		1	Stelo	Rod	
3		1	Testina ant. interna	Front head int.	
4		1	Testina ant. esterna	Front head ext.	
5		1	Guarnizione	Gasket	ORD-267
6		1	Guarnizione	Gasket	SWP 130145
7		1	Guarnizione	Gasket	B-570511/NEI
8		1	Guarnizione	Gasket	BRS 447
9		1	Guarnizione	Gasket	ORD 447
10	20635	1	Boccola	Bushing	BR MB 130100 DU
11		1	Guarnizione	Gasket	DSM 944846/1A
12		1	Guarnizione	Gasket	ORD 860
13		1	Guarnizione	Gasket	ORD-375
14		1	Vite	Screw	STCE M10
15		1	Pistone	Piston	
16	20562	2	Boccola	Bushing	BR MB 95100 DU
17		1	Distanziere	Spacer	L=95
18	20563	2	Boccola	Bushing	BR MB 95600 DU
19		1	Distanziere	Spacer	L=40
	1975	1	Kit guarnizioni	Kit gaskets	

ANTONELLI

HYDRAULIC CYLINDER P-213 UF
AZ-42.5/125

15.4

P	CODE	Q	DESCRIZIONE	DESCRIPTION	DIMENSIONS/STANDARDS
	43056U	**1**	**Cilindro idraulico P-213 UF**	**Hydraulic cylinder P-213 UF**	
1		1	Cilindro	Cylinder	
2		1	Stelo	Rod	
3		1	Testina ant. interna	Front head int.	
4		1	Testina ant. esterna	Front head ext.	
5		1	Guarnizione	Gasket	OR-4525
6		1	Guarnizione	Gasket	SWP 90105
7		1	Guarnizione	Gasket	B-413354/1NEI
8		1	Guarnizione	Gasket	BRS 437
9		1	Guarnizione	Gasket	OR-437
10	20695	1	Boccola	Bushing	BR MB 9075 DU
11		1	Guarnizione	Gasket	DBM 649551
12		1	Guarnizione	Gasket	OR-4312
13		1	Guarnizione	Gasket	OR-4650
14		1	Guarnizione	Gasket	E/GT 165/160 x 15
15		1	Pistone	Piston	
16		1	Vite	Screw	STCE M10
17	20694	2	Boccola	Bushing	BR MB 7080 DU
18		1	Distanziere	Spacer	L=78
19	20685	2	Boccola	Bushing	BR MB 7045 DU
	1975	1	Kit guarnizioni	Kit gaskets	

ANTONELLI

HYDRAULIC CYLINDER P-214 UF
AZ-42.5/125

15.5

P	CODE	Q	DESCRIZIONE	DESCRIPTION	DIMENSIONS/STANDARDS
	43057U	**1**	**Cilindro idraulico P-214 UF**	**Hydraulic cylinder P-214 UF**	
1		1	Cilindro	Cylinder	
2		1	Stelo	Rod	
3		1	Testina anteriore	Front head	
6		1	Guarnizione	Gasket	SWP 6580
7		1	Guarnizione	Gasket	EU 6580
8		1	Guarnizione	Gasket	BRS 346
9		1	Guarnizione	Gasket	OR-346
11		1	Guarnizione	Gasket	DBM 452354
12		1	Guarnizione	Gasket	ORD-832
13		1	Guarnizione	Gasket	ORD-157
14		1	Guarnizione	Gasket	E/GT 115/110 x 9,7
15		1	Pistone	Piston	
16		1	Vite	Screw	STCE M8X16 UNI 5927
17	20520	2	Boccola	Bushing	BR MB 5060 DU
18		1	Distanziere	Spacer	L=52
19	20571	2	Boccola	Bushing	BR MB 5030 DU
	1977	1	Kit guarnizioni	Kit gaskets	

ANTONELLI

BOOM HYDRAULIC CYLINDER CHECK VALVE U/97 AZ-42.5/125

16.6

P	CODE	Q	DESCRIZIONE	DESCRIPTION	DIMENSIONS/STANDARDS
	180214	**1**	**Valvola di blocco**	**Check valve**	**U/97**
	180214.340	1	Valvola di blocco 340 bar	Check valve 340 bar	U/97 340 bar
	180214.310	1	Valvola di blocco 310 bar	Check valve 310 bar	U/97 310 bar
	180214.280	1	Valvola di blocco 280 bar	Check valve 280 bar	U/97 280 bar

ANTONELLI

FIRST BOOM SECTION
AZ-42.5/125

17.1

P	CODE	Q	DESCRIZIONE	DESCRIPTION	DIMENSIONS/STANDARDS
	284509	**1**	**Primo elemento**	**First section**	
1	42001001	1	Struttura base	Base structure	
2	42006006	1	Bilanciere B	Beam B	
3	20613	4	Bronzina	Bronze bushing	BR-1784
4	31180	2	Perno	Pin	P-0911
5	121201	5	Copiglia	Split pin	D.10*120
6	170012	7	Ingrassatore	Lubricator	A/M10*1
7	31190	1	Perno	Pin	P-0913/A
8	21446	1	Boccola	Bushing	BO-1804
9	90718	1	Dado auto	Self-locking nut	M45*3
10	21437	1	Boccola	Bushing	BO-1807
11	20617	2	Bronzina	Bronze bushing	MB 120100 DU
12	31188	1	Perno	Pin	P-0914
13	31181	1	Perno	Pin	P-0912
14	31189	1	Perno	Pin	P-0920

ANTONELLI	SECOND BOOM SECTION AZ-42.5/125	17.2

P	CODE	Q	DESCRIZIONE	DESCRIPTION	DIMENSIONS/STANDARDS
	284512	**1**	**Secondo elemento**	**Second section**	
1	42002001	1	Struttura base	Base structure	
2	42006003	1	Bilanciere C	Beam C	
3	41006005	1	Biella B	Connecting rod B	
4	21438	1	Boccola	Bushing	BO-1801
5	20618	1	Bronzina	Bronze bushing	MB 110115DU
6	170012	5	Ingrassatore	Lubricator	A/M10*1
7	20557	3	Bronzina	Bronze bushing	MB 11060 DU
8	31192	1	Perno	Pin	P-0917
9	121206	5	Copiglia	Split pin	D.10*110
10	31183	1	Perno	Pin	P-0916
11	21439	1	Boccola	Bushing	BO-1820
12	20618	2	Bronzina	Bronze bushing	MB 110115 DU
13	31191	1	Perno	Pin	P-0922
14	31224	1	Perno	Pin	P-0939/A
15	180161	1	Ghiera	Ring nut	Fig. 030397
16	31185	1	Perno	Pin	P-0921
17	31182	1	Perno	Pin	P-0919
18	20626	2	Bronzina	Bronze bushing	MB 12060 DU
19	90113	2	Vite	Screw	TE M10x16x1.5
20	120302	1	Tassello in gomma	Rubber pad	D.133x60
21	230772	1	Tampone in teflon	Teflon pad	Dis. 010131
22	91803	2	Vite	Screw	TCCE M10x35x1.5
23	90617	2	Dado Autobloc.	Self-locking nut	M10x1.5

	THIRD BOOM SECTION AZ-42.5/125	17.3

P	CODE	Q	DESCRIZIONE	DESCRIPTION	DIMENSIONS/STANDARDS
	284515	**1**	**Terzo elemento**	**Third section**	
1	42003001	1	Struttura base	Base structure	
2	41006004	1	Biella C	Connecting rod C	
3	42006016	1	Bilanciere D	Beam D	
4	20623	2	Bronzina	Bronze bushing	BR-1836
5	21436	2	Boccola	Bushing	BO-1812
6	20563	4	Bronzina	Bronze bushing	MB 9560 DU
7	31182	1	Perno	Pin	P-0919
8	170012	5	Ingrassatore	Lubricator	A/M10*1
9	121201	3	Copiglia	Split pin	D.10*120
10	31223	1	Perno	Pin	P-0941
11	21178	1	Boccola	Bushing	BO-1604
12	20551	2	Bronzina	Bronze bushing	MB 7050 DU
13	31221	1	Perno	Pin	P-0943
14	31251	2	Perno	Pin	P-0942/A
15	20017	1	Boccola	Bushing	BO-1159
16	90664	1	Dado auto	Self-locking nut	M36*3
17	31220	1	Perno	Pin	P-0940/A
18	180161	1	Ghiera	Ring nut	Fig. 030397

ANTONELLI

FOURTH BOOM SECTION
AZ-42.5/125

17.4

P	CODE	Q	DESCRIZIONE	DESCRIPTION	DIMENSIONS/STANDARDS
	284518	**1**	**Quarto elemento**	**Fourth section**	
1	42004001	1	Struttura base	Base structure	
2	42006018	1	Bilanciere E	Beam E	
3	42006017	1	Biella D	Connecting rod D	
4	20623	2	Bronzina	Bronze bushing	BR-1836
5	21523	1	Boccola	Bushing	BO-1902
6	20551	4	Bronzina	Bronze bushing	MB 7050DU
7	31255	1	Perno	Pin	P-0973
8	170012	5	Ingrassatore	Lubricator	A/M10*1
9	120218	4	Copiglia	Split pin	D.8*80
10	30872	1	Perno	Pin	P-0656/1
11	21113	1	Boccola	Bushing	BO-1567
12	20552	2	Bronzine	Bronze bushing	MB 6040 DU
13	31252	1	Perno	Pin	P-0947/A
14	20075	1	Boccola	Bushing	BO-1231
15	90664	1	Dado auto	Self locking nut	M36*3
16	31033	2	Perno	Pin	P-0797/3
17	21221	2	Boccola	Bushing	BO-1657
18	90709	2	Dado auto	Self locking nut	M30*2
19	31218	1	Perno	Pin	P-0946
20	31219	1	Perno	Pin	P-0945
21	90113	2	Vite	Screw	TE M10x16x1.5
22	230772	1	Tassello in Teflon	Teflon pad	Dis. 010131
23	230768	1	Tampone in teflon	Teflon pad	Dis. 140799
24	91803	4	Vite	Screw	TCCE M10x35
25	100039	2	Rosetta	Washer	D.10
26	90617	4	Dado autobl.	Nut	M10x1.5

ANTONELLI	FIFTH BOOM SECTION AZ-42.5/125	17.5

P	CODE	Q	DESCRIZIONE	DESCRIPTION	DIMENSIONS/STANDARDS
	284521	1	**Quinto elemento**	**Fifth section**	
1	42005001	1	Struttura base	Base structure	
2	42006019	1	Biella E	Connecting rod E	
3	20571	2	Bronzina	Bronze bushing	MB 5030 DU
4	20570	4	Bronzina	Bronze bushing	BR-1575
5	20565	2	Bronzina	Bronze bushing	MB 5050 DU
6	31215	1	Perno	Pin	P-0949
7	170012	1	Ingrassatore	Lubricator	A/M10*1
8	120218	1	Copiglia	Split pin	D.8*80
9	90268	2	Vite	Screw	TE M16x45x1.5
10	100093	2	Rosetta	Washer	D.16
11	90638	2	Dado autobl.	Self-locking nut	M16x1.5
12	120547	1	Gancio tubo terminale	Hook for end hose	Dis. 030423
13	120524	1	Gancio tubo terminale speciale	Special hook for end hose	

ANTONELLI

CONCRETE PIPELINE DIAGRAM
AZ-42.5/125
MATR. 4713

18.1

P	CODE	Q	DESCRIZIONE	DESCRIPTION	DIMENSIONS/STANDARDS	
			Schema tubaz. cls	Concrete pipeline diagram	DIS. 42017002	
1	62106	1	Tubo Jolly	Adapter pipe	0860 L=730 ± 20 mm	OK
2	62079	3	Curva	Curve	1009-5"1/2	
3	62188	1	Tubo Jolly	Adapter pipe	0927 L=2265 ± 20 mm	OK
4	62189	1	Tubo Jolly	Adapter pipe L=1065	0928 L=~~1080~~ ± 20 mm	
5	62214	1	Tubo Jolly	Adapter pipe	0946 L=510 ± 20 mm	OK
6	60967	1	Tubo Jolly	Adapter pipe	0741 L=420 ± 20 mm	OK
7	62307	1	Tubo	Pipe	1015 L=555	
8	60985	1	Tubo	Pipe	0758 L=500	
9	60969	1	Tubo	Pipe	0743 L=900	
10	60513	1	Tubo	Pipe	0511 L=480	
11	60500	10	Tubo	Pipe	0499 L=3000	
12	60523	11	Curva	Curve	0520-5"1/2	
13	62213	1	Tubo	Pipe	0947 L=1090	

NB: For the exact length of the adapter pipes, see the exact value stamped on the plate of the pipe.

ANTONELLI

SUPPORT FOR CONCRETE PLANT

18.2

P	CODE	Q	DESCRIZIONE	DESCRIPTION	DIMENSIONS/STANDARDS
	120545		**Supporto impianto cemento**	**Support for concrete plant**	5"1/2
1	111126	1	Fascetta 5"1/2	Hose clamp 5"1/2	Dis. 0502982
2	31202	2	Perno	Pin	P-0923
3	100041	4	Rosetta	Washer	D.12 UNI 6594 R40
4	120224	2	Copiglia	Split-pin	D.3x30
5	50552	1	Tirante	Tie rod	M12x70 UNI 6058 8.8
6	100108	1	Rosetta	Washer	D.12,5x30x5
7	90628	1	Dado autobloccante	Self locking nut	M12x1.75 UNI 7473 8G

ANTONELLI

HYDRAULIC SYSTEM DIAGRAM
AZ-42.5/125
HAWE

20.1

P	CODE	Q	DESCRIZIONE	DESCRIPTION	DIMENSIONS/STANDARDS
		1	**Schema impianto oleodinam.**	**Hydraulic system diagram**	**FIG. 42016007**
1	43053U	1	Cilindro idraulico	Hydraulic cylinder	P-204/A UF
2	43047U	1	Cilindro idraulico	Hydraulic cylinder	P-205/A UF
3	43055U	1	Cilindro idraulico	Hydraulic cylinder	P-211 UF
4	43056U	1	Cilindro idraulico	Hydraulic cylinder	P-213 UF
5	43057U	1	Cilindro idraulico	Hydraulic cylinder	P-214 UF
6	180214.310	5	Valvola di blocco U/97	Check valve U/97	U/97 310 bar
7	180214.340	3	Valvola di blocco U/97	Check valve U/97	U/97 340 bar
8	180214.280	2	Valvola di blocco U/97	Check valve U/97	U/97 280 bar
10	81008	5	Tubo gomma	Hose	3/8" L=950
11	81006	3	Tubo gomma	Hose	3/8" L=1400
12	81041	10	Tubo gomma	Hose	1/2" L=950
13	81042	12	Tubo gomma	Hose	1/2" L=1400

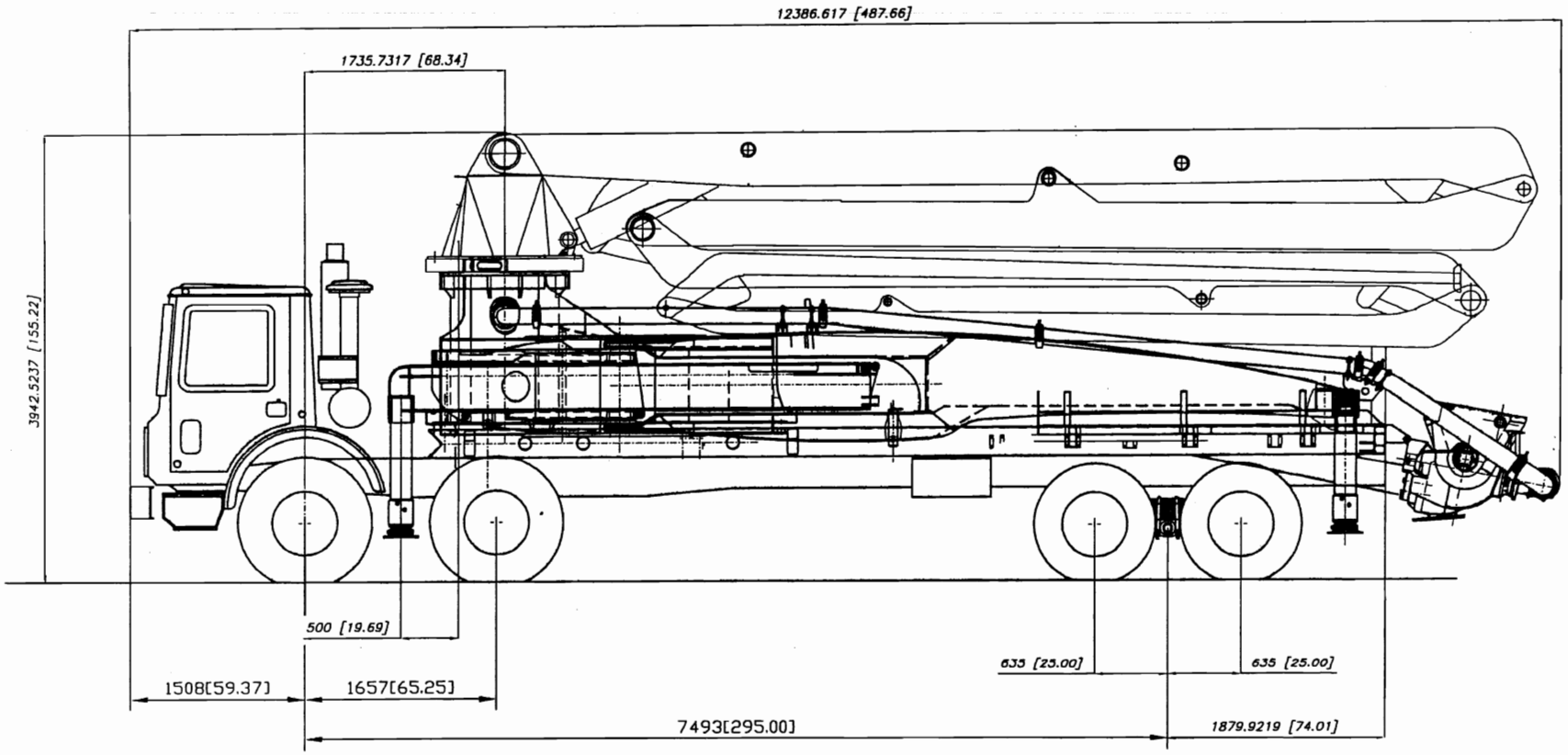

16152 kg

18787 kg

Total weight : 34799 kg

Waltzinger Baumaschinen Vertrieb und Service GmbH				free dimension tolerance DIN 7168 medium		scale 1:1	weight 34799 kg
						semi-finished product Material	
					date / name	Mounting 42M5 XXT on Mack MR688S	
				drawn	1999/08/31 kr		
				chkd.			
				appd.			
				change only with CAD		B 00 4 107	sheet / of
issue	MODIFICATION	date	name	original		replacement for	replacement by

this information may not be copied by a third parts. Subject to copyright (paragraph 1 no. 3 of (Urheberrechtsgesetz" from 14.06.1991)

REED SCHEMATIC LIST-MODEL XXT42.5RZ

CONCRETE BOOM PUMP

CUSTOMER INFO:

BULL CONCRETE
MODEL: XXT42.5RZ CONCRETE BOOM PUMP
REED-SN 06-246-XXT42.5RZ
BOOM-SN:

DRAWING No.	
B 51 3 017	CONTROL PANEL-7 SHEETS
B 56 1 084	CABLE HARNESS-2 SHEETS
B 56 1 085	CABLE LOOP-PUMP 2 SHEETS
B 56 1 086	CABLE HARNESS-BOOM-3 SHEETS
42016004	HYDRAULIC SYSTEM-1 SHEET

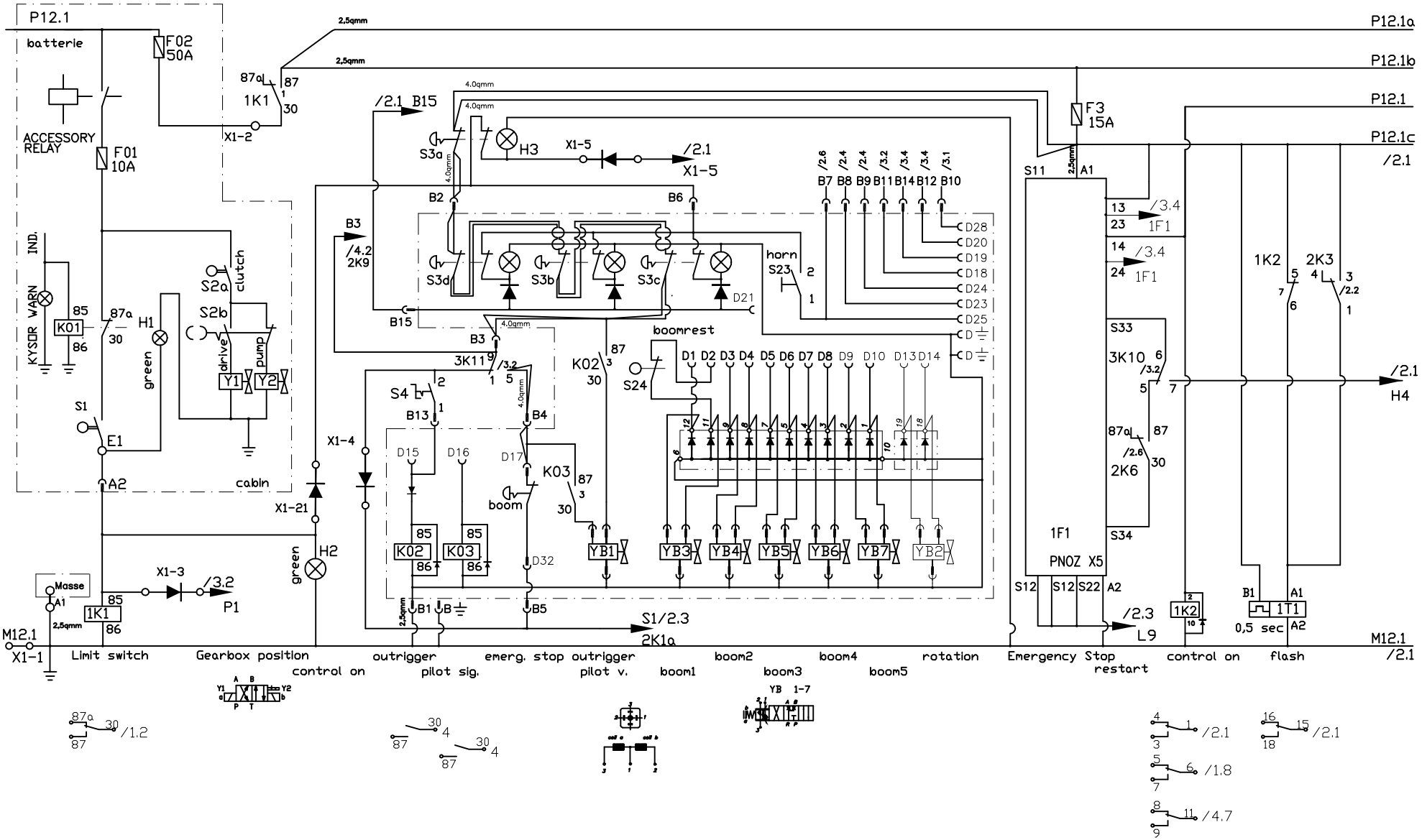

Waitzinger Baumaschinen Vertrieb und Service GmbH	FREE DIMENSION TOLERANCE DIN 7168 MEDIUM			SCALE		WEIGHT
				M 42.5 XXT		
		DATE	NAME	control panel V4 Page 1		
	DRAWN	2000/03/27	Fetzer			
	CHKD.					
	APPD.					
d siehe B_513017.doc 19.07.05 Körner						
c siehe B_513017.doc 24.02.05 Körner	CHANGE ONLY WITH CAD			B 51 3 017		SHEET
b siehe B_513017.doc 02.02.04 Körner						OF
a siehe B_513017.doc 15.01.04 Körner						
ISSUE MODIFICATION DATE NAME	ORIGINAL			REPLACEMENT FOR		REPLACEMENT BY

THIS INFORMATION MAY NOT BE COPIED BY A THIRD PARTY. SUBJECT TO COPYRIGHT (PARAGRAPH 1 NO. 3 OF "URHEBERRECHTSGESETZ" FROM 14.06.1991)

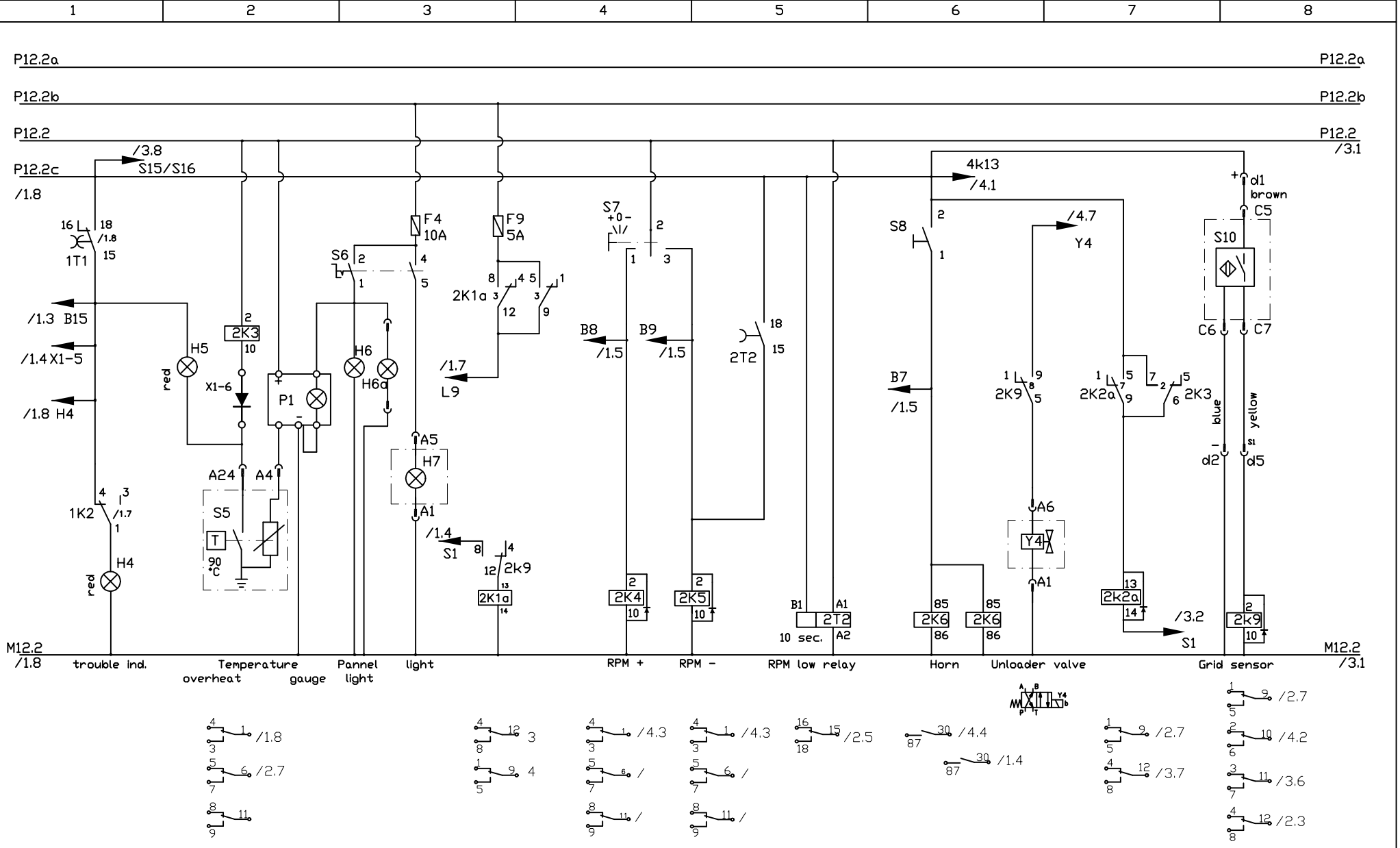

Waitzinger Baumaschinen Vertrieb und Service GmbH				FREE DIMENSION TOLERANCE DIN 7168 MEDIUM			SCALE / WEIGHT
					DATE	NAME	M 42.5 XXT
				DRAWN	2000/03/27	Fetzer	control panel V4 Page 2
				CHKD.			
				APPD.			
d	siehe B_513017.doc	19.07.05	Körner				
c	siehe B_513017.doc	24.02.05	Körner	CHANGE ONLY WITH CAD			B 51 3 017
b	siehe B_513017.doc	02.02.04	Körner				SHEET / OF
a	siehe B_513017.doc	15.01.04	Körner				
ISSUE	MODIFICATION	DATE	NAME	ORIGINAL			REPLACEMENT FOR / REPLACEMENT BY

THIS INFORMATION MAY NOT BE COPIED BY A THIRD PARTY. SUBJECT TO COPYRIGHT (PARAGRAPH 1 NO. 3 OF "URHEBERRECHTSGESETZ" FROM 14.06.1991)

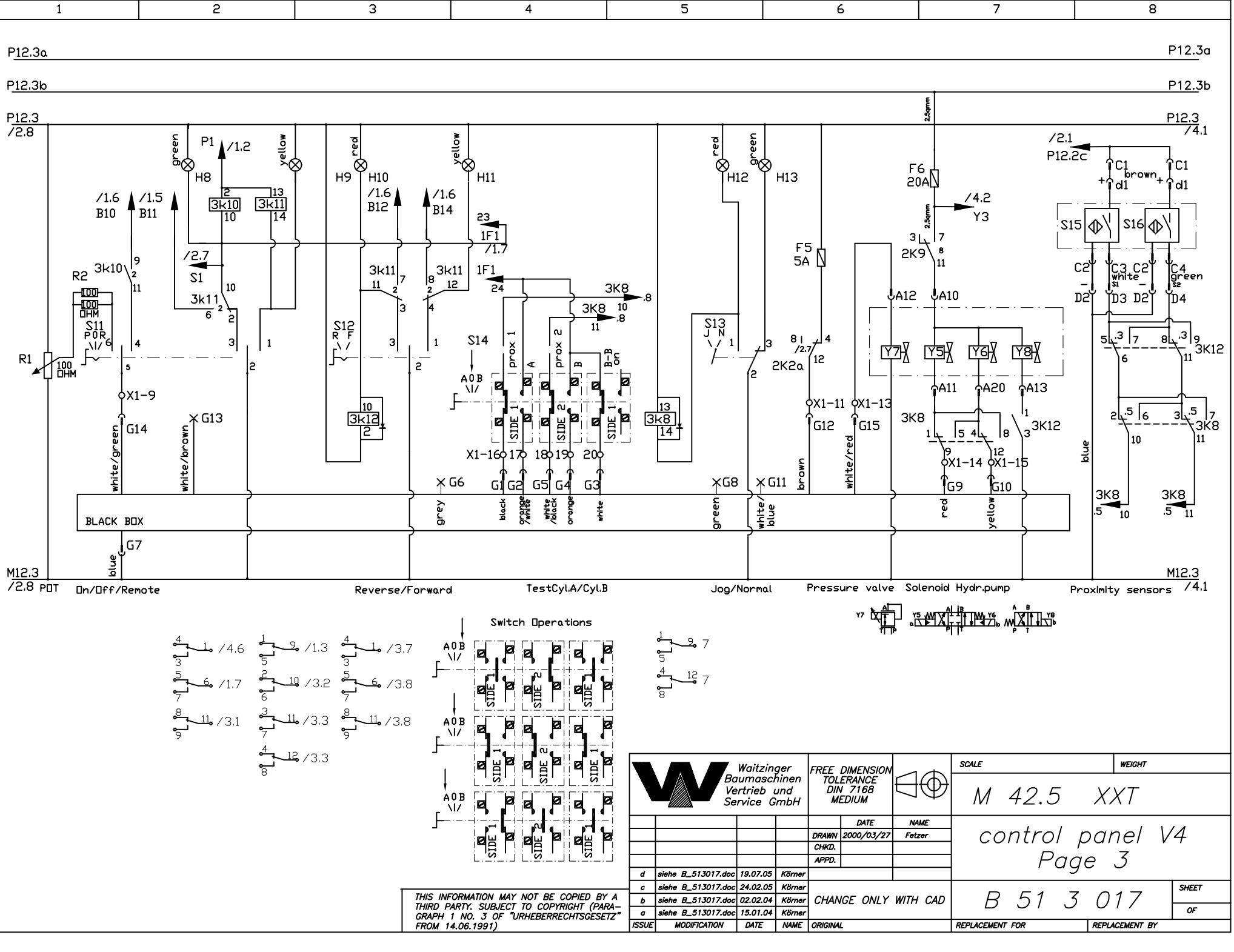

1	2	3	4	5	6	7	8

Waitzinger Baumaschinen Vertrieb und Service GmbH

FREE DIMENSION TOLERANCE DIN 7168 MEDIUM

	DATE	NAME
DRAWN	2000/03/27	Fetzer
CHKD.		
APPD.		

ISSUE	MODIFICATION	DATE	NAME
d	siehe B_513017.doc	19.07.05	Körner
c	siehe B_513017.doc	24.02.05	Körner
b	siehe B_513017.doc	02.02.04	Körner
a	siehe B_513017.doc	15.01.04	Körner
ORIGINAL			

CHANGE ONLY WITH CAD

SCALE

WEIGHT

M 42.5 XXT

control panel V4
Page 3

B 51 3 017

SHEET

OF

REPLACEMENT FOR

REPLACEMENT BY

THIS INFORMATION MAY NOT BE COPIED BY A THIRD PARTY. SUBJECT TO COPYRIGHT (PARAGRAPH 1 NO. 3 OF "URHEBERRECHTSGESETZ" FROM 14.06.1991)

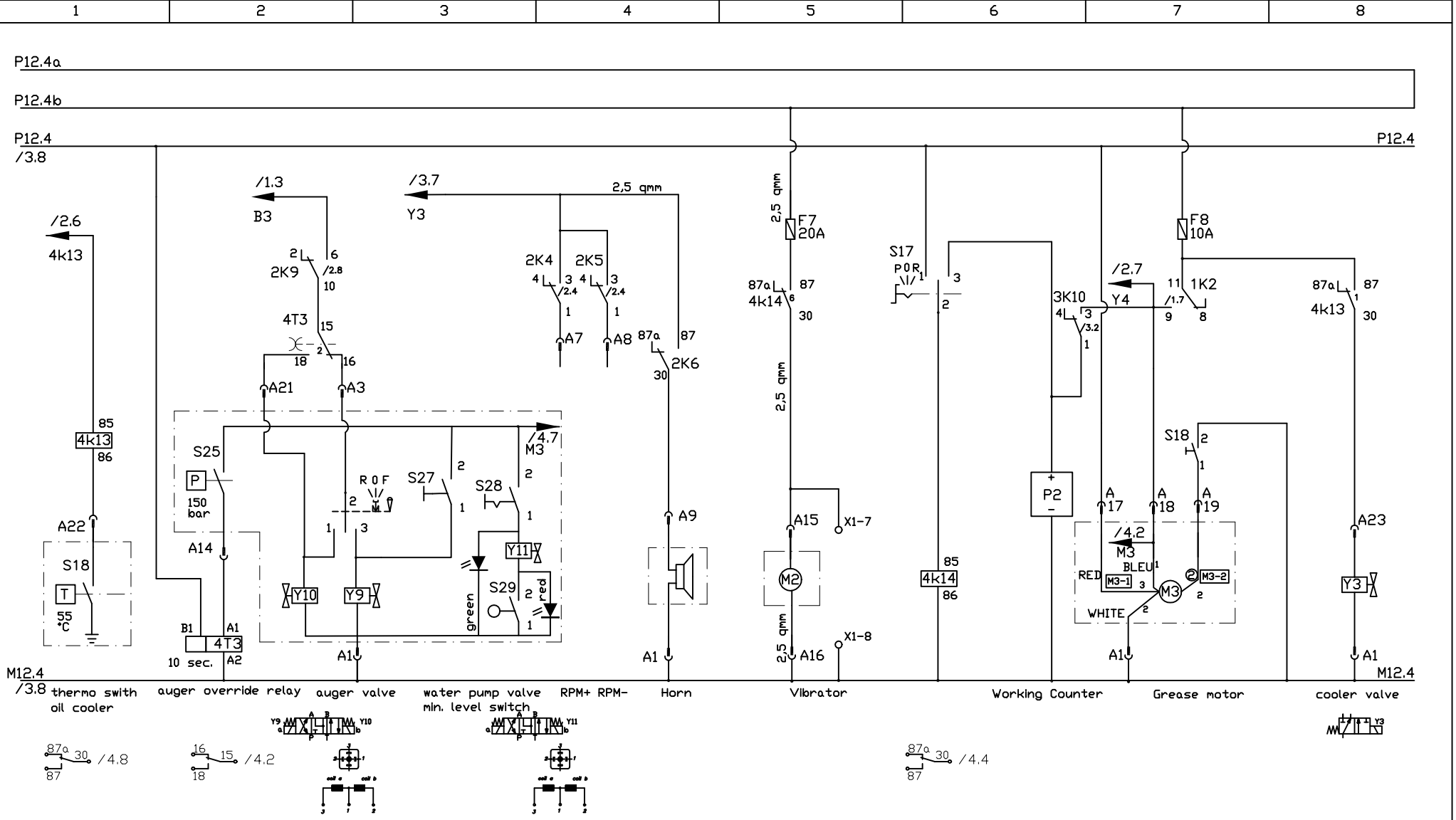

Waitzinger Baumaschinen Vertrieb und Service GmbH				FREE DIMENSION TOLERANCE DIN 7168 MEDIUM			SCALE / WEIGHT
					DATE	NAME	M 42.5 XXT
				DRAWN	2000/03/27	Fetzer	control panel V4 Page 4
				CHKD.			
				APPD.			
d	siehe B_513017.doc	19.07.05	Körner				
c	siehe B_513017.doc	24.02.05	Körner	CHANGE ONLY WITH CAD			B 51 3 017
b	siehe B_513017.doc	02.02.04	Körner				SHEET / OF
a	siehe B_513017.doc	15.01.04	Körner				
ISSUE	MODIFICATION	DATE	NAME	ORIGINAL			REPLACEMENT FOR / REPLACEMENT BY

THIS INFORMATION MAY NOT BE COPIED BY A THIRD PARTY. SUBJECT TO COPYRIGHT (PARAGRAPH 1 NO. 3 OF "URHEBERRECHTSGESETZ" FROM 14.06.1991)

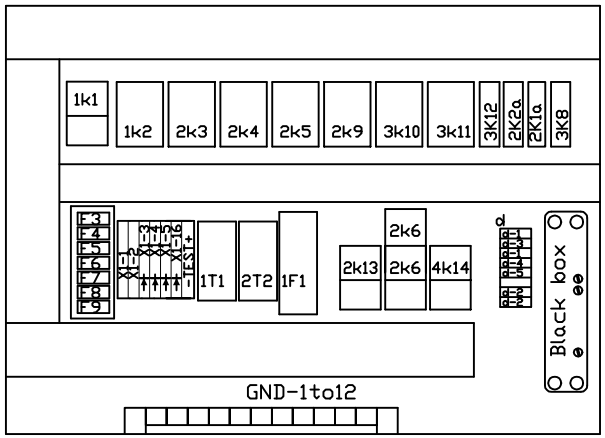

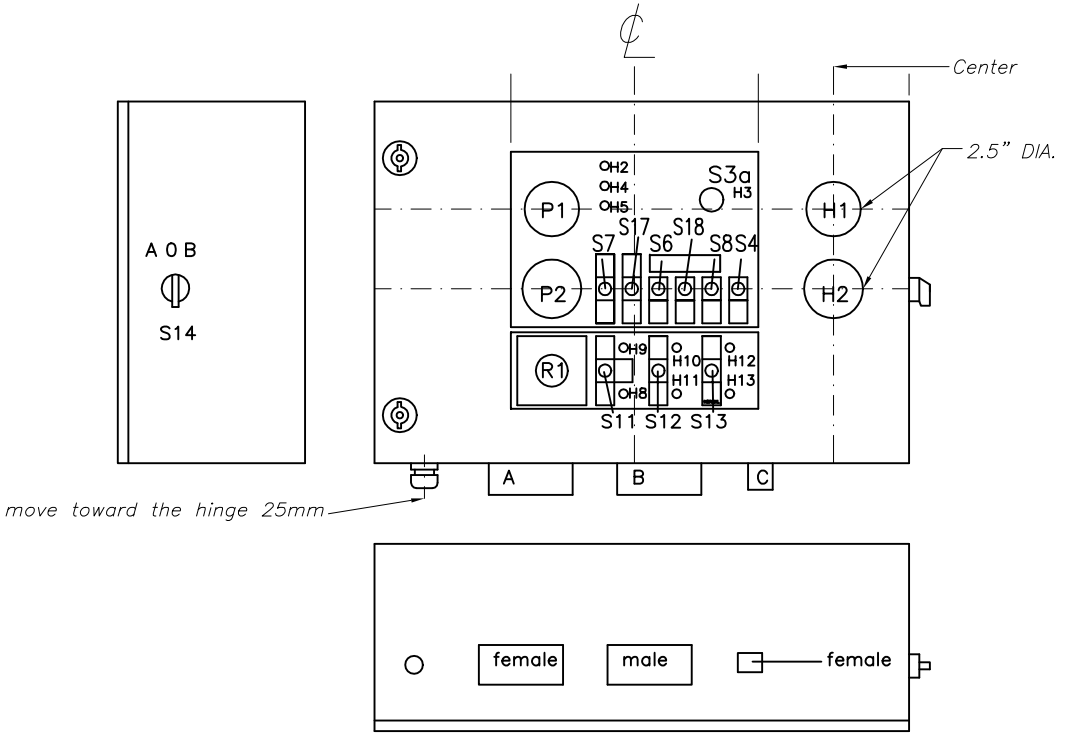

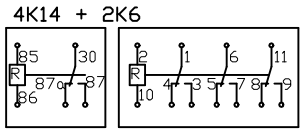

THIS INFORMATION MAY NOT BE COPIED BY A THIRD PARTY. SUBJECT TO COPYRIGHT (PARAGRAPH 1 NO. 3 OF "URHEBERRECHTSGESETZ" FROM 14.06.1991)

ISSUE	MODIFICATION	DATE	NAME
d	siehe B_513017.doc	19.07.05	Körner
c	siehe B_513017.doc	24.02.05	Körner
b	siehe B_513017.doc	02.02.04	Körner
a	siehe B_513017.doc	15.01.04	Körner

Waitzinger Baumaschinen Vertrieb und Service GmbH

FREE DIMENSION TOLERANCE DIN 7168 MEDIUM

CHANGE ONLY WITH CAD

ORIGINAL

	DATE	NAME
DRAWN	2000/03/27	Fetzer
CHKD.		
APPD.		

SCALE

WEIGHT

M 42.5 XXT

control panel V4
Page 5

B 51 3 017

SHEET

OF

REPLACEMENT FOR

REPLACEMENT BY

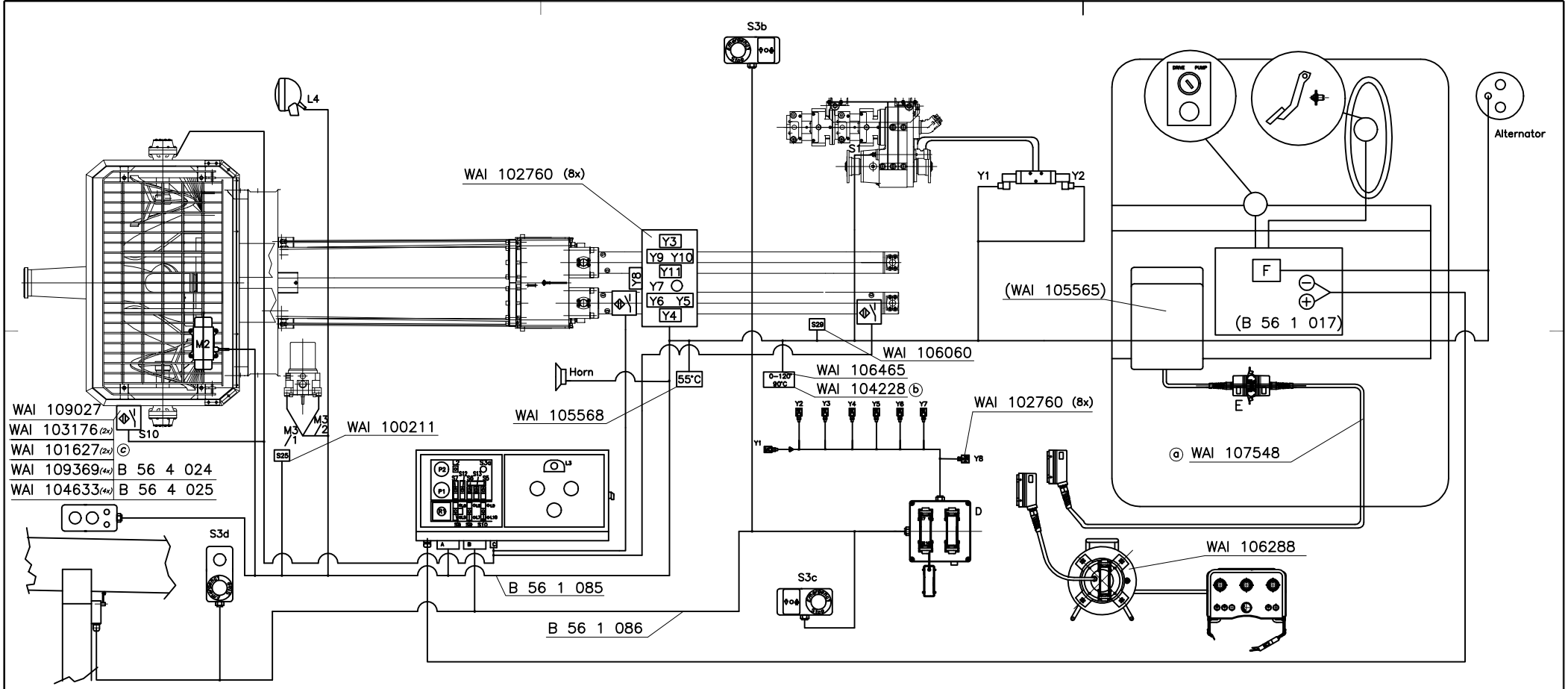

PLUG A

1	Y3+L4+M3/1+ Y4+Y7+FAN	brn
2	S1>F1	blk/whi
3	Y3−1	red/yel
4	temp. switch	yel/whi
5	L4	grn/whi
6	Y4−1	blu/whi
7	F3	blu
8	F2	blk
9	Horn	blk
10	Y5−1/hopper Y6/Y8/Y9	blk/grn
11	Y5− 2	blk/red
12	Y7	gry/red
13	Y8	whi/brn
14	Y9	vio
15	M2	blk
16	M2	blu
17	M3/1 −1	gry
18	M3/1−3	grn
19	M3/2 −2	yel
20	Y6	whi
21	temp switch	whi
22	temp switch	whi
23	Y10	grn
24	free	free
	F5	red
	F6	gry/blk

PLUG B

1	D10−|||	brn	ground
2	S3b	gry	emergency stop
3	S3c	blk	emergency stop
4	D13	blu	emergency stop
5	D 22	gry/red	emergency stop
6	S3b−d	white	emergency stop
7	D 20	whi/grn	horn
8	D 15	grn	RPM +
9	D 16	blk/whi	RPM −
10	D 24	vio	Pot
11	D 17	blk/grn	pumping on
12	D 19	gry/blk	reverse
13	free	free	free
14	D 18	blu/whi	pumping
15	D 21	blk/red	flashing light
16	free	free	free

PLUG C

pin No.	wire No.	function
1	brown	+
2	blue	−
3	black	Sensor 1
4	black	Sensor 2
5		
6		
7		
8		

PLUG D

⏚	A 1	brn	ground
1	Y3/3	brn/whi	boom 1 up
2	Y3/2	blu	boom 1 down
3	Y4/3	grn/whi	boom 2 up
4	Y4/2	blk/grn	boom 2 down
5	Y5/3	gry/blk	boom 3 up
6	Y5/2	blk/whi	boom 3 down
7	Y6/3	blk/red	boom 4 up
8	Y6/2	gry/red	boom 4 down
9	free	free	free
10	−|||	brn	ground
11	Y2/2	vio	turn clockwise
12	Y2/3	blu/whi	turn anticlockw.
13	B4	red	plus
14	Y1/2/3 Y7	gry	pilot valve
15	B 8	grn	RPM +
16	B 9	blk/whi	RPM −
17	B 11	blk/grn	pumping on
18	B 14	blu/whi	pumping
19	B 12	gry/blk	reverse
20	B 7	whi/grn	horn
21	B 15	blk/red	free
22	B 5	gry/red	emergency stop
23	Y7	brn/whi	free
24	B 10	vio	POT

PLUG E

pin No.	wire No.	function	pin No.	wire No.	function
1	1	power supply 12V	17	34	boom 4 up
2	3	emergency stop	18	31	boom 3 down
3	4	12 V+	19	32	boom 3 up
4	5	RPM−	20	29	turn clockwise
5	6	free	21	30	turn anticlockw.
6	8	horn	22	28	boom 1 down
7	11	RPM+	23	27	boom 1 up
8	13	pump on	24	39	boom 2 down
9	9	GND	25	40	boom 2 up
10	14	reverse	26	–	free
11	25	pilot valve	27	–	free
12	–	free	28	35	pump speed pot
13	–	free	29	–	free
14	–	free	30	–	free
15	–	free	31	–	free
16	33	boom 4 down	32	–	free

TERMINAL F

blk/whi	A2
whi	S1
grn	Y1
gry/whi	Y2
blu	A7
blk	A8
vio	Lima D
brn	⊖
red	reserve
gry/blk	reserve

THIS INFORMATION MAY NOT BE COPIED BY A THIRD PARTY. SUBJECT TO COPYRIGHT (PARAGRAPH 1 NO. 3 OF "URHEBERRECHTSGESETZE" FROM 14.06.1991)

Waitzinger Baumaschinen Vertrieb und Service GmbH

FREE DIMENSION TOLERANCE DIN 7168 MEDIUM

SCALE without | WEIGHT

own parts list

	DATE	NAME
DRAWN	2003/06/30	MI
CHKD.		
APPD.		

c	siehe B_561084.doc	07.11.05	Körner	CHANGE ONLY WITH CAD
b	siehe B_561084.doc	29.08.05	Körner	
a	siehe B_561084.doc	23.07.04	Körner	
	MODIFICATION	DATE	NAME	ORIGINAL

Cable harness / accessories REED 42XXT

B 56 1 084

SHEET | OF

REPLACEMENT FOR | REPLACEMENT BY

Lose Teile:

Pos. 34 Kabelbinder 32 Stück

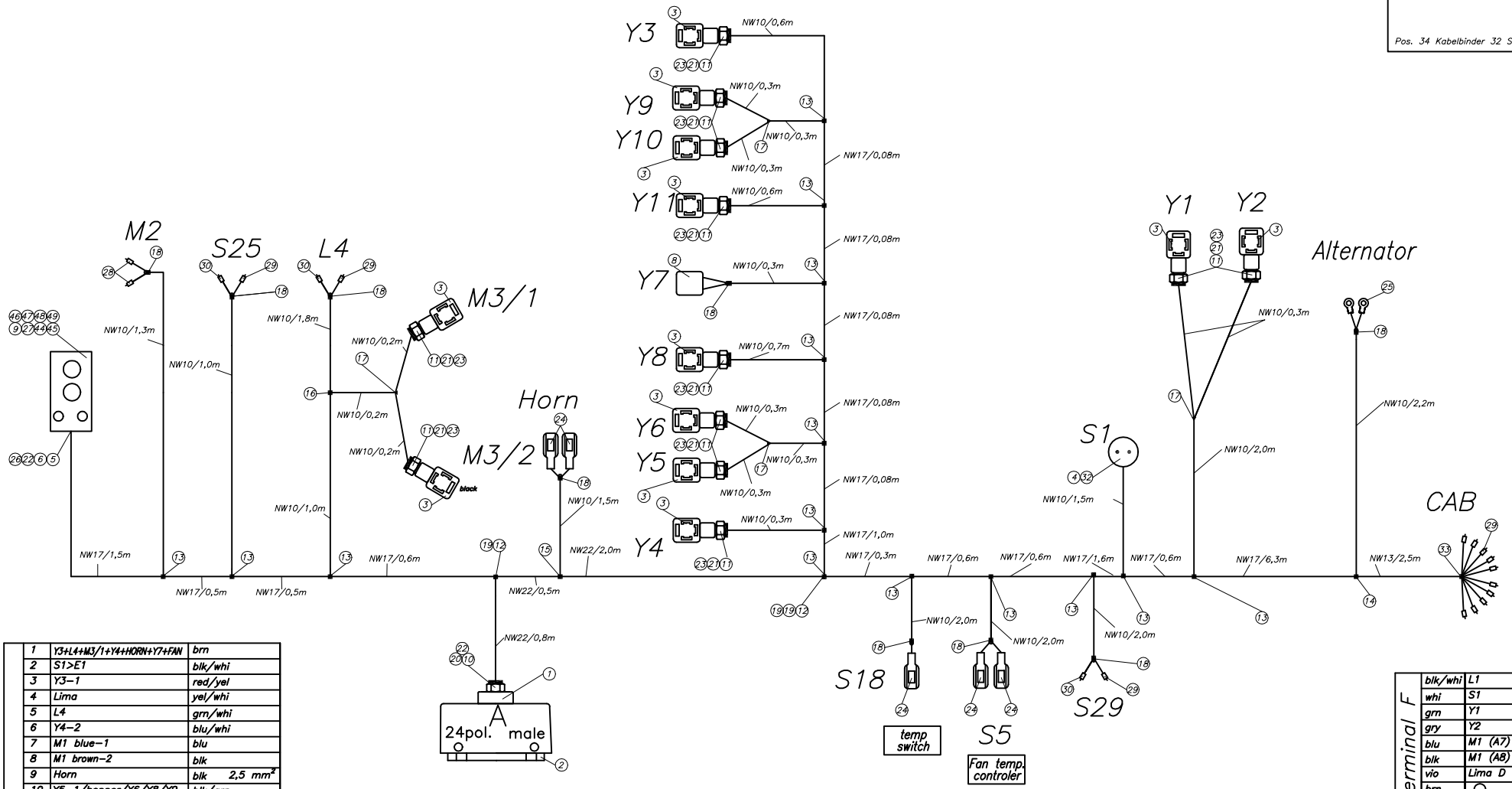

PLUG A			
	1	Y3+L4+M3/1+Y4+HORN+Y7+FAN	brn
	2	S1>E1	blk/whi
	3	Y3–1	red/yel
	4	Lima	yel/whi
	5	L4	grn/whi
	6	Y4–2	blu/whi
	7	M1 blue–1	blu
	8	M1 brown–2	blk
	9	Horn	blk 2,5 mm²
	10	Y5–1/hopper/Y6/Y8/Y9	blk/grn
	11	Y5–2	blk/red
	12	Y7	gry/red
	13	Y8	whi/brn
	14	Y9	vio
	15	M2	blk 2,5 mm²
	16	M2	blu 2,5 mm²
	17	M3/1 –1	gry
	18	M3/1–3	grn
	19	M3/2 –2	yel
	20	Y6	whi
	21		
	22		
	23	Fan	grn
	24	S5	yel/whi
		Res. F	red
		Res. F	gry/blk

Terminal F		
	blk/whi	L1
	whi	S1
	grn	Y1
	gry	Y2
	blu	M1 (A7)
	blk	M1 (A8)
	vio	Lima D
	brn	⊖
	red	reserve
	gry/blk	reserve

this information may not be copied by a third parts. Subject to copyright (paragraph 1 no. 3 of (Urheberrechtsgesetz" from 14.06.1991)

Waitzinger Baumaschinen Vertrieb und Service GmbH

free dimension tolerance DIN 7168 medium

		date	name
drawn		2003/06/30	Mi
chkd.			
appd.			

change only with CAD

issue	MODIFICATION	date	name
original			

scale | weight

own parts list

cable loop pump REED cl 42XXT

B 56 1 085

sheet 1 of 2

replacement for | replacement by

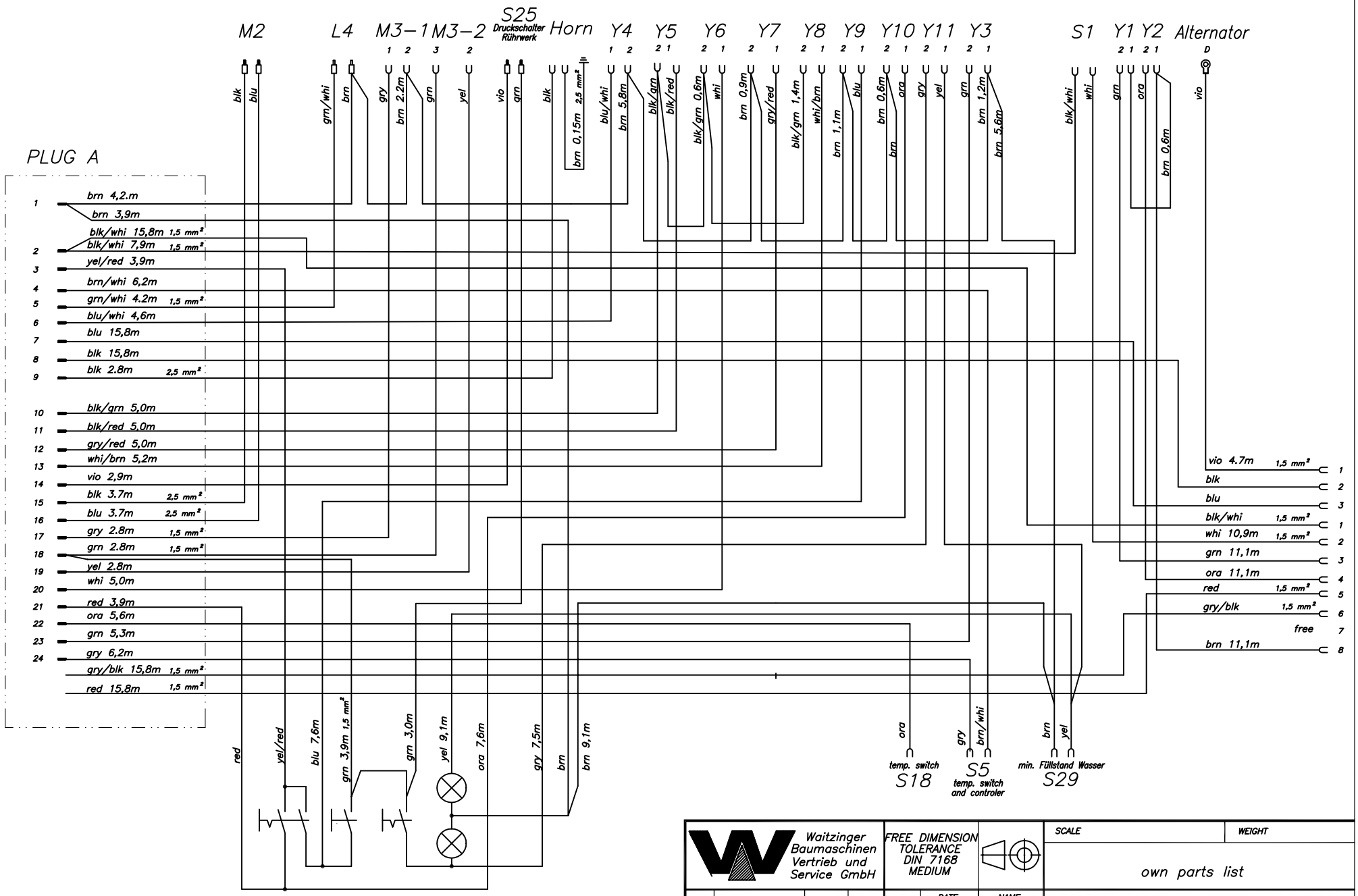

Alle nicht bezeichneten Kabel sind 1mm²
Kabel um 10% länger als angegeben zuschneiden

THIS INFORMATION MAY NOT BE COPIED BY A THIRD PARTY. SUBJECT TO COPYRIGHT (PARAGRAPH 1 NO. 3 OF "URHEBERRECHTSGESETZ" FROM 14.06.1991)

Waitzinger Baumaschinen Vertrieb und Service GmbH

FREE DIMENSION TOLERANCE DIN 7168 MEDIUM

	DATE	NAME
DRAWN	2003/06/30	Fetzer
CHKD.		
APPD.		

CHANGE ONLY WITH CAD

ORIGINAL

ISSUE	MODIFICATION	DATE	NAME

SCALE

WEIGHT

own parts list

cable loop pump REED cl 42XXT

B 56 1 085

SHEET 2 OF 2

REPLACEMENT FOR

REPLACEMENT BY

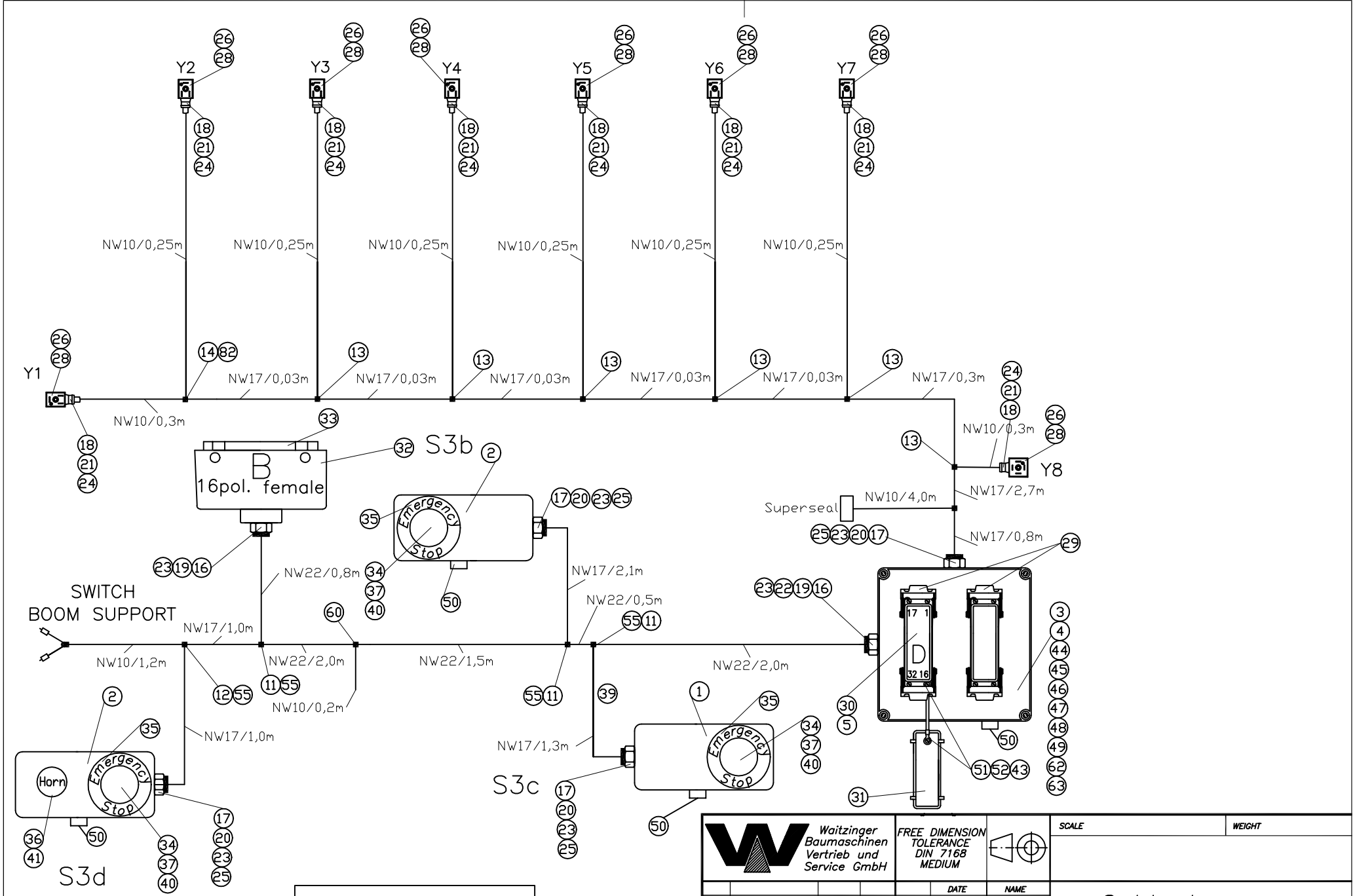

Lose Teile:
Pos. 59 Kabelbinder 10 Stück

THIS INFORMATION MAY NOT BE COPIED BY A THIRD PARTY. SUBJECT TO COPYRIGHT (PARAGRAPH 1 NO. 3 OF "URHEBERRECHTSGESETZ" FROM 14.06.1991)

ISSUE	MODIFICATION	DATE	NAME
c	siehe b_561086.doc	09.11.05	Körner
b	siehe b_561086.doc	02.06.05	Körner
a	siehe b_561086.doc	02.02.04	Körner

Waitzinger Baumaschinen Vertrieb und Service GmbH

FREE DIMENSION TOLERANCE DIN 7168 MEDIUM

	DATE	NAME
DRAWN	2003/06/30	Mi
CHKD.		
APPD.		

CHANGE ONLY WITH CAD

ORIGINAL

SCALE

WEIGHT

Cable harness boom REED 42XXT

B 56 1 086

SHEET 1 OF 3

REPLACEMENT FOR

REPLACEMENT BY

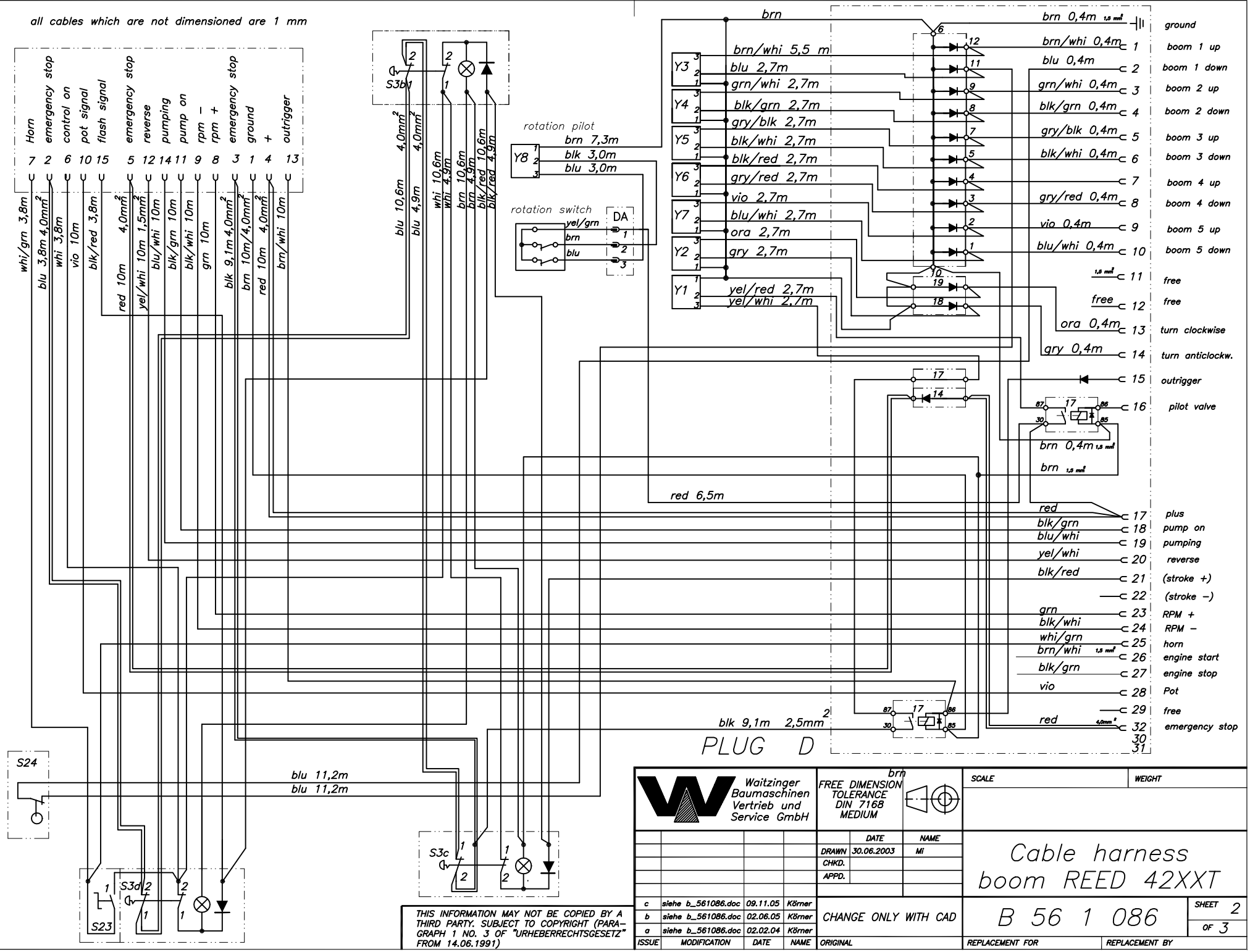

Waitzinger Baumaschinen Vertrieb und Service GmbH	FREE DIMENSION TOLERANCE DIN 7168 MEDIUM	brn	SCALE / WEIGHT

	DATE	NAME
DRAWN	30.06.2003	Mi
CHKD.		
APPD.		

Cable harness boom REED 42XXT

B 56 1 086

SHEET 2 OF 3

ISSUE	MODIFICATION	DATE	NAME
c	siehe b_561086.doc	09.11.05	Körner
b	siehe b_561086.doc	02.06.05	Körner
a	siehe b_561086.doc	02.02.04	Körner

CHANGE ONLY WITH CAD

ORIGINAL

REPLACEMENT FOR

REPLACEMENT BY

THIS INFORMATION MAY NOT BE COPIED BY A THIRD PARTY. SUBJECT TO COPYRIGHT (PARAGRAPH 1 NO. 3 OF "URHEBERRECHTSGESETZ" FROM 14.06.1991)

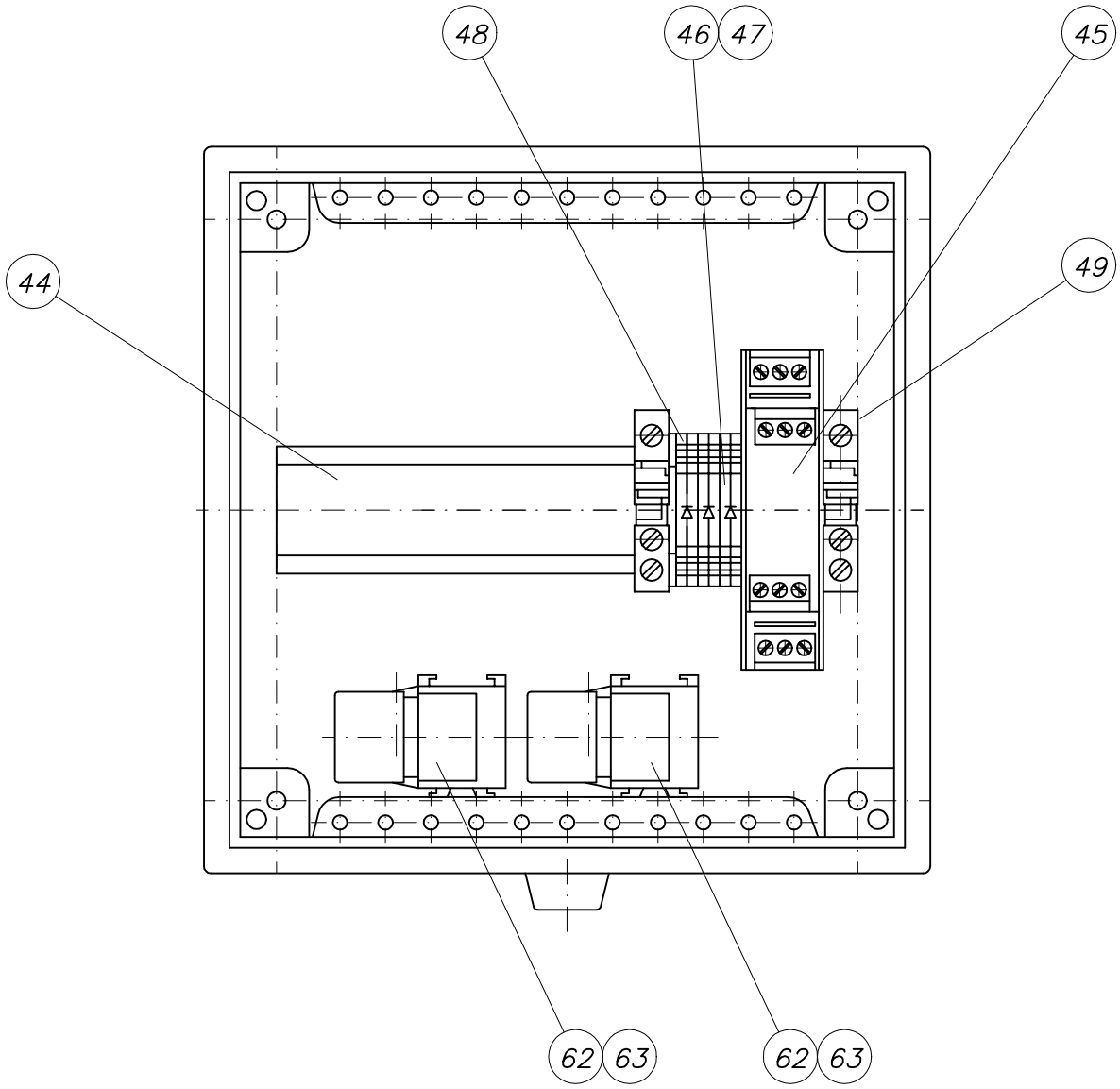

THIS INFORMATION MAY NOT BE COPIED BY A THIRD PARTY. SUBJECT TO COPYRIGHT (PARAGRAPH 1 NO. 3 OF "URHEBERRECHTSGESETZ" FROM 14.06.1991)

Waitzinger Baumaschinen Vertrieb und Service GmbH

FREE DIMENSION TOLERANCE DIN 7168 MEDIUM

	DATE	NAME
DRAWN	2003/06/30	Mi
CHKD.		
APPD.		

SCALE | WEIGHT

Cable harness boom REED 42XXT

B 56 1 086

SHEET 3 OF 3

ISSUE	MODIFICATION	DATE	NAME
c	siehe B_561086.doc	09.11.05	Körner
b	siehe B_561086.doc	02.06.05	Körner
a	siehe B_561086.doc	02.02.04	Körner

CHANGE ONLY WITH CAD

ORIGINAL | REPLACEMENT FOR | REPLACEMENT BY

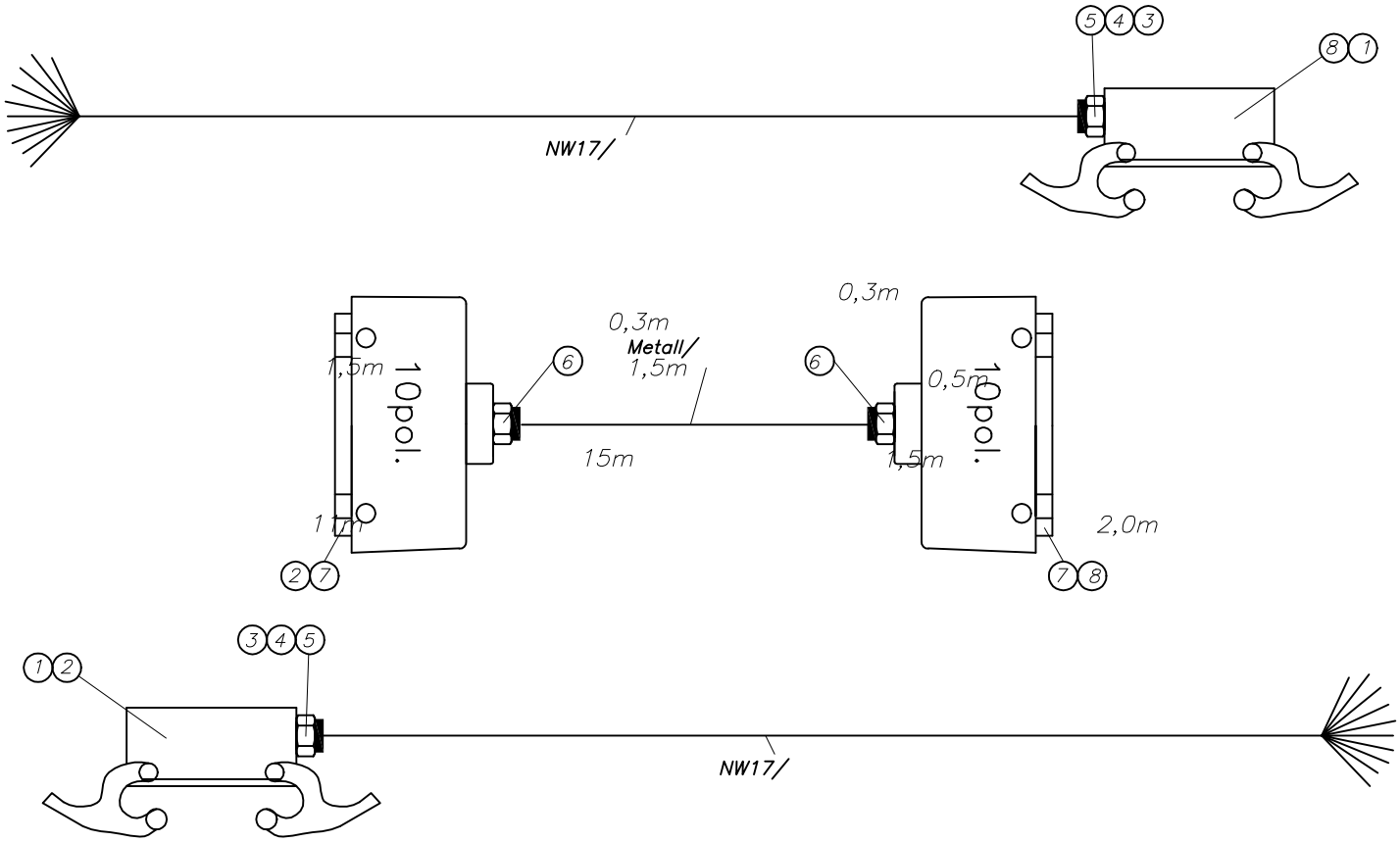

Waitzinger Baumaschinen Vertrieb und Service GmbH				Freimaßtoleranz DIN 7168 mittel		Maßstab	Gewicht
						eigene Stückliste	
					Datum / Name		
				Bearb.	06.09.2004 Körner	Kabelbaum Mast 37m REED	
				Gepr.			
				Norm			
				Änderung nur auf CAD		B 56 2 066	Blatt 2 von 2 Bl.
Zust.	Änderung	Datum	Name	Urspr.		Ers. für	Ers. durch

Ohne unsere Genehmigung darf diese Zeichnung weder vervielfältigt noch dritten Personen oder Konkurrenzfirmen mitgeteilt werden.(Paragraph 1 Nr.3 des Urheberrechtsgesetzes vom 14.06.1901)

Drehkopf

Ohne unsere Genehmigung darf diese Zeichnung weder vervielfältigt noch dritten Personen oder Konkurrenzfirmen mitgeteilt werden.(Paragraph 1 Nr.3 des Urheberrechtsgesetzes vom 14.06.1901)

Zust.	Änderung	Datum	Name

Waitzinger Baumaschinen Vertrieb und Service GmbH

Freimaßtoleranz DIN 7168 mittel

	Datum	Name
Bearb.	06.09.2004	Körner
Gepr.		
Norm		

Änderung nur auf CAD

Ursprung

Maßstab

Gewicht

eigene Stückliste

Kabelbaum Mast 37m REED

B 56 2 066

Blatt 1 von 2 Bl.

Ers. für

Ers. durch

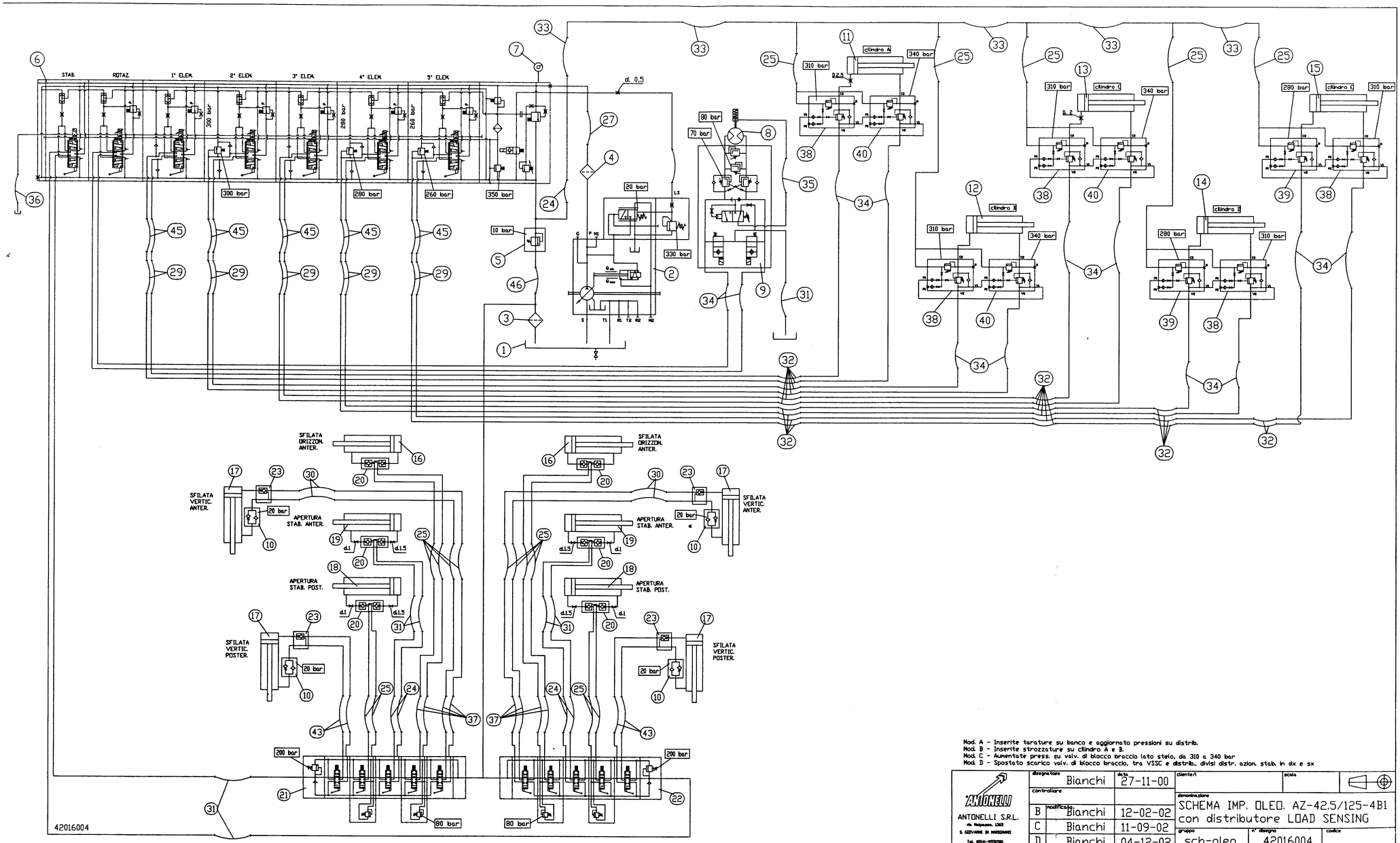

Mod. A - Inserite tarature su banco e aggiornato pressioni su distrib.
Mod. B - Inserite strozzature su cilindro A e B.
Mod. C - Aumentate press. su valv. di blocco braccio lato stelo, da 310 a 340 bar
Mod. D - Spostato scarico valv. di blocco braccio, tra VSSC e distrib., divisi distr. azion. stab. in dx e sx

ANTONELLI S.R.L. Via Malpasso, 1365 S. GIOVANNI IN MARIGNANO Tel. 0541-955258 Fax. 0541-957183	disegnatore: Bianchi	data: 27-11-00	cliente/i	scala
	controllore		denominazione: SCHEMA IMP. OLEO. AZ-42.5/125-4B1 con distributore LOAD SENSING	
	B modificato: Bianchi	12-02-02		
	C Bianchi	11-09-02		
	D Bianchi	04-12-02	gruppo: sch-oleo	n° disegno: 42016004

Proprietà privata. Questo disegno è di proprietà della ANTONELLI S.R.L. e non può essere copiato, riprodotto e divulgato senza autorizzazione scritta. La Società proprietaria tutela i propri diritti e

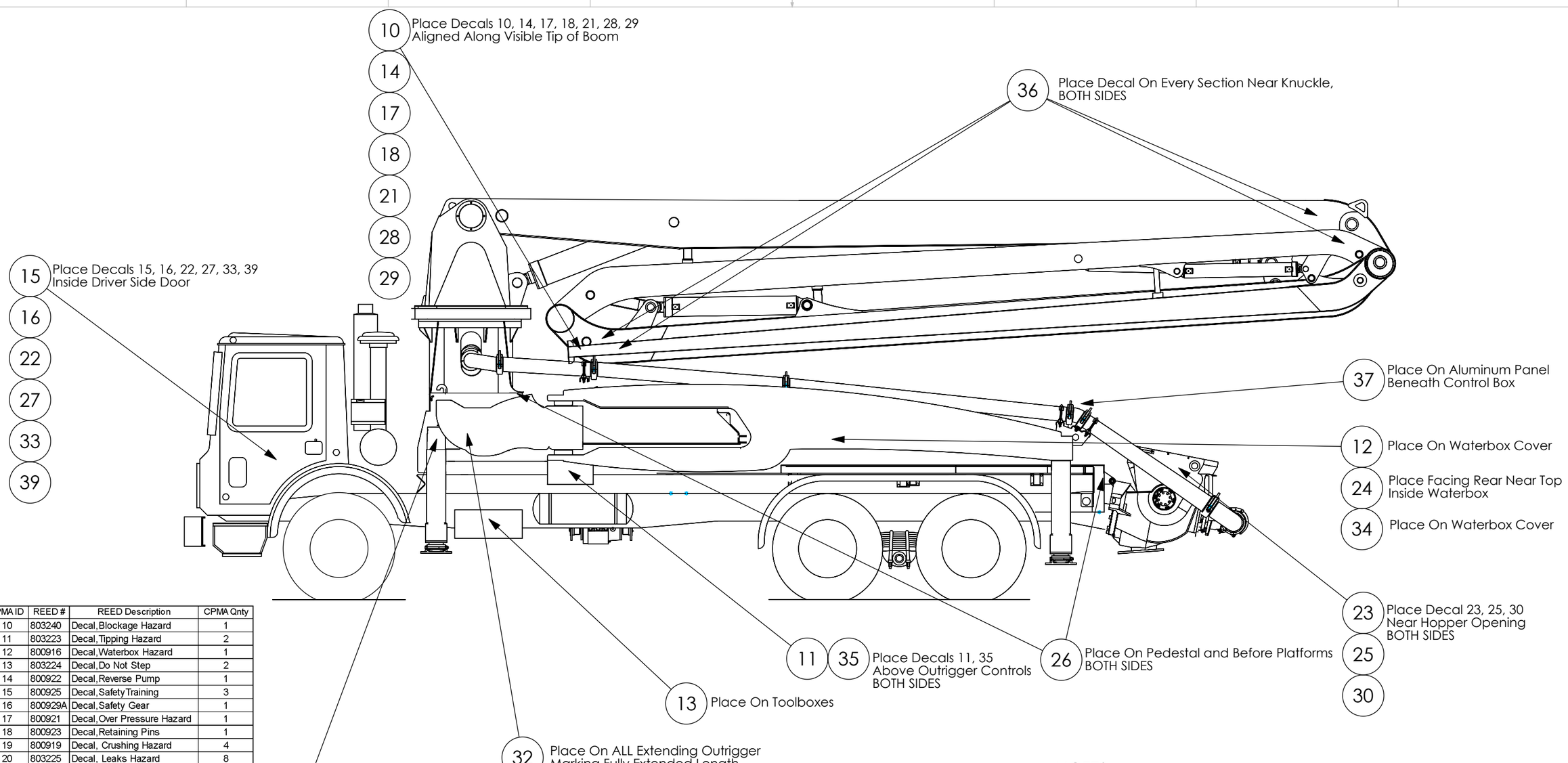

CPMA ID	REED #	REED Description	CPMA Qnty
10	803240	Decal,Blockage Hazard	1
11	803223	Decal,Tipping Hazard	2
12	800916	Decal,Waterbox Hazard	1
13	803224	Decal,Do Not Step	2
14	800922	Decal,Reverse Pump	1
15	800925	Decal,SafetyTraining	3
16	800929A	Decal,Safety Gear	1
17	800921	Decal,Over Pressure Hazard	1
18	800923	Decal,Retaining Pins	1
19	800919	Decal, Crushing Hazard	4
20	803225	Decal, Leaks Hazard	8
21	800928	Decal, Boom Crack Hazard	1
22	803226	Decal, How to Order	1
23	800918	Decal, Agitator Hazard, Foot	2
24	803227	Decal, Missing Guard	1
25	800917	Decal, Agitator Hazard, Hand	2
26	803228	Decal, Off Platform	4
27	803229	Decal, CPMA	1
28	803230	Decal, Starting Discharge	1
29	800927	Decal, Not a Crane	1
30	803231	Decal, Toxic Dust	2
31	800915	Decal, Stay Clear	4
32	803232	Decal, Extending Outrigger	2
33	803233	Decal, Safety Instructions	1
34	800924	Decal, Remote Control	1
35	803234	Decal, Outriggers	2
36	800913	Decal, 17Ft Hazard	8
37	800930	Decal, 1-14 Op Signals	1
38	803235	Decal, 1-7 Op Signals	0
39	803236	Decal, CPMA	1
40	803237	Decal, Pressurized Pipes	25
41	803238	Decal, Pressurized Hoses	25
42	803239	Safety Tags	25

NOTES
1. Place Decals 40, 41 Next To Clamps ON ALL Straight Pipe
2. Place Decal 42 ON ALL Clamps

REV	DATE	DESCRIPTION OF CHANGE	BY
		REVISION	

DO NOT SCALE DRAWING

UNLESS OTHERWISE SPECIFIED DIMENSIONS ARE IN INCHES

TOLERANCES:
FRACTIONAL ± 1/16
XX ± .031
XXX ± .010
ANGULAR: MACH ±1 BEND ±1

BREAK ALL SHARP EDGES .010 MAX x 45

ALL MACHINED SURFACES UNLESS OTHERVISE SPECIFIED

DRAWN	CT	0606
CHECKED	CT	0606

REED

CONCRETE PLACING EQUIPMENT
CHINO, CA 91710

TITLE
Decal Legend

MATERIAL
MATERIAL

PART NUMBER
803243

REV.

THIS DRAWING IS THE PROPERTY OF REED MANUFACTURING AND IS LOANED WITHOUT CONSIDERATION OTHER THAN THE BORROWERS AGREEMENT THAT IT SHALL NOT BE REPRODUCED, COPIED, LOANED, OR DISPOSED OF, DIRECTLY OR INDIRECTLY, NOR USED FOR ANY PURPOSE OTHER THAN THAT FOR WHICH IT IS SPECIFICALY FURNISHED.

SHEET 1 OF 1

The following important assumptions should be made if different specifications for your pump and boom are not available from the manufacturer:

I. Maximum discharge hose length to be supported by the boom is 10'0" – assume this if not specified longer by the manufacturer for your unit.

II. It is important that the concrete placing boom not be overloaded. Therefore you should never:

1. Use the boom to hoist equipment.

2. Attach excessive hoses to the tip of the boom.

3. Use pipeline on the boom that exceeds the thickness specified by the manufacturer.

   Maximum boom pipe wall thickness — on older pumps generally 9 gauge is the maximum allowable; assume this if a heavier wall is not specified by the manufacturer for your unit.

   The following is the maximum pipeline thickness for many popular brand concrete placing booms.

1. Schwing	7 ga or 5 mm (.195 inch)
2. Putzmeister	9 ga
3. Thomsen 845, 875, 2001	9 ga (.150 inch)
4. Challenge Titan 3900	9 ga (.150 inch)
5. Whiteman	11 ga
6. Morgen	9 ga
7. Pecco	9 ga
8. Elba	7 ga

III. The unit is unsafe if any cracking or structural damage is found or if the maximum dimensions noted above are exceeded. Operators should be instructed to report these conditions to management immediately.

Record sheet for regular inspections by the competent inspection personnel

Instection report No.: ..... Date: .....

There are – are no – reasons why the machine should not continue to be operated.

Reinspection is – is not – required for .....

Conpetent inspector:

....

(Date, City) (Name)

.....

(Signature)

Instection report No.: ..... Date: .....

There are – are no – reasons why the machine should not continue to be operated.

Reinspection is – is not – required for .....

Conpetent inspector:

....

(Date, City) (Name)

.....

(Signature)

Instection report No.: ..... Date: .....

There are – are no – reasons why the machine should not continue to be operated.

Reinspection is – is not – required for .....

Conpetent inspector:

....

(Date, City) (Name)

.....

(Signature)

Record sheet for regular inspections by the competent inspection personnel

Instection report No.: ..... Date: .....

There are – are no – reasons why the machine should not continue to be operated.

Reinspection is – is not – required for .....

Conpetent inspector:

....

(Date, City) (Name)

.....

(Signature)

Instection report No.: ..... Date: .....

There are – are no – reasons why the machine should not continue to be operated.

Reinspection is – is not – required for .....

Conpetent inspector:

....

(Date, City) (Name)

.....

(Signature)

Instection report No.: ..... Date: .....

There are – are no – reasons why the machine should not continue to be operated.

Reinspection is – is not – required for .....

Conpetent inspector:

....

(Date, City) (Name)

.....

(Signature)

Record sheet for regular inspections by the competent inspection personnel

Instection report No.: ..... Date: .....

There are – are no – reasons why the machine should not continue to be operated.

Reinspection is – is not – required for .....

Conpetent inspector:

....

(Date, City) (Name)

.....

(Signature)

Instection report No.: ..... Date: .....

There are – are no – reasons why the machine should not continue to be operated.

Reinspection is – is not – required for .....

Conpetent inspector:

....

(Date, City) (Name)

.....

(Signature)

Instection report No.: ..... Date: .....

There are – are no – reasons why the machine should not continue to be operated.

Reinspection is – is not – required for .....

Conpetent inspector:

....

(Date, City) (Name)

.....

(Signature)

Record sheet for regular inspections by the competent inspection personnel

Instection report No.: ..... Date: .....

There are – are no – reasons why the machine should not continue to be operated.

Reinspection is – is not – required for .....

Conpetent inspector:

....

(Date, City) (Name)

.....

(Signature)

Instection report No.: ..... Date: .....

There are – are no – reasons why the machine should not continue to be operated.

Reinspection is – is not – required for .....

Conpetent inspector:

....

(Date, City) (Name)

.....

(Signature)

Instection report No.: ..... Date: .....

There are – are no – reasons why the machine should not continue to be operated.

Reinspection is – is not – required for .....

Conpetent inspector:

....

(Date, City) (Name)

.....

(Signature)

assembly groupes - structuring

with description from the assemby groups and parts respectively

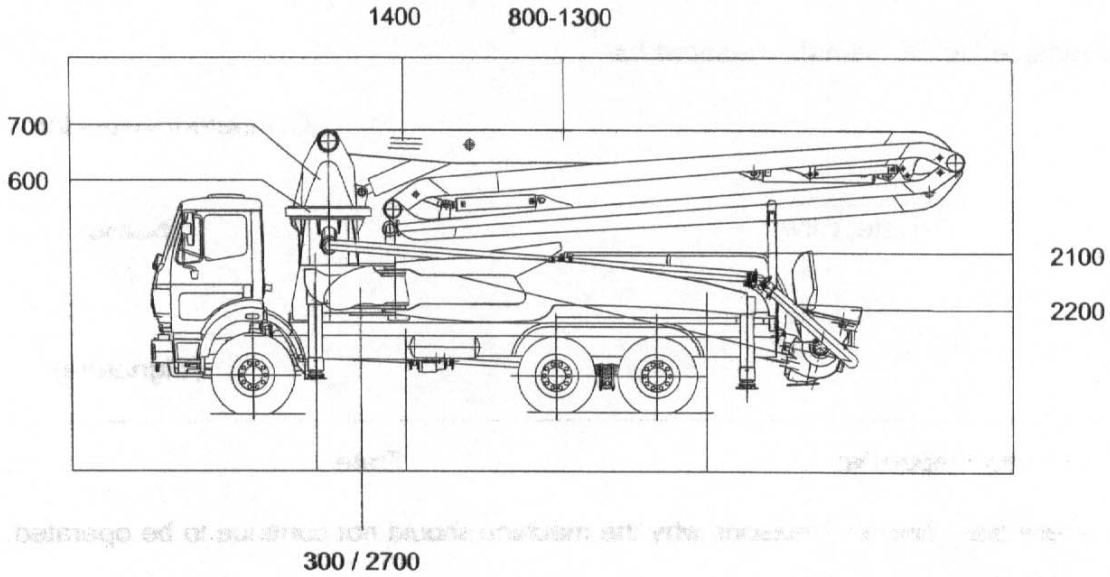

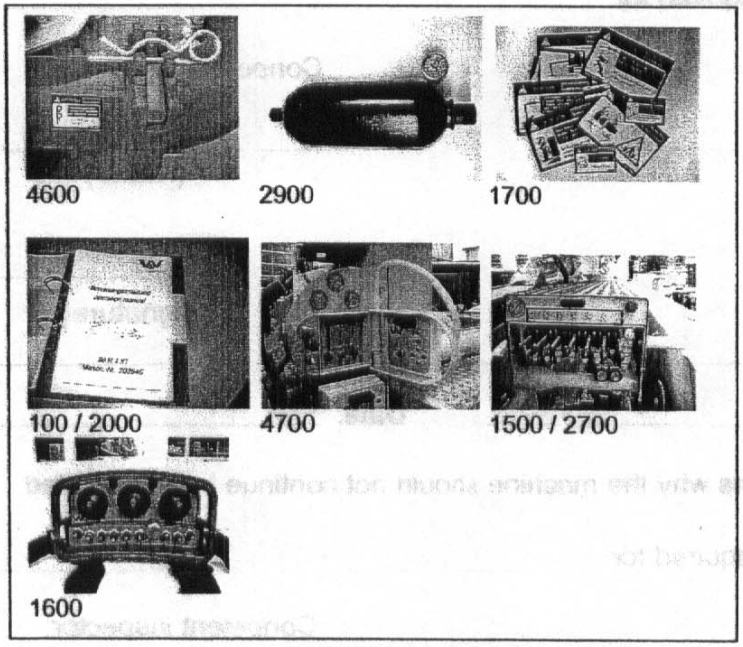

concrete boom:

100	documents
200	sub frame
300	outrigger front R+L
400	outrigger rear L+R
500	pedestal
	slewing head with ball pivot
700	slewing head with slewing column
800-1300	
	boom (joint A-E)
1400	concrete delivery line
1500	hydraulic system and hydraulic valves
1600	electric equipment
1700	sticker sets

concrete pump:

2000	documents
2100	drive assembly
2200	gear box
2300	hydraulic pump (main)
2400	oil-tank
2500	drive shaft
2600	fuel equipment
2700	hydraulic control system
2800	oil-cooler
2900	acccumulator
3000	central lubrication
3100	hydraulic motor
3200	hydraulic lines
3300	air compressor
3400	control panel
3500	concrete pump
3700	S-valve
3800	hopper
4000	vacuum pump aggregate
4100	sub frame
4200	water tank
4300	axle
4400	water pump
4500	vibrator
4600	safety guards, equipment
4700	elecrical system

Inspection report for concrete booms

Inspection report –Nr:	Machine-Nr	Hours of operation:	
		Concrete output m³:	
Company:	Post code:	City:	
Boom Type:	Boom Nr.	NL	WV

Proof – Result of the Tests

without defects	defects	reinspection required	**shut down**
☐	☐	☐	☐

Reinspection until date:.....

Error code:

00 no objections	08 corrosion	16 porous	24 deformation
01 cracks	09 lacquer failures	17 burned through	25 bear movement
02 broken	10 fraying	18 not fixed	26 lubrication
03 leaky	11 scratched	19 clemp	27 readability
04 no function	12 bendet	20 sawing	28 missing components
05 low lifetime	13 noises	21 contaminated	29 hydraulical
06 worn out	14 vibration	22 bad contact	30 electrical
07 dirt	15 miscellaneous	23 temperature	31 reinspection required

100 documents

101 instruction manual ☐☐☐☐☐

102 spare parts list ☐☐☐☐☐

200 sub frame

201 frame connection cpl. ☐☐☐☐☐

300 outrigger front R+L

301 transportation safety device ☐☐☐☐☐

302 outrigger ☐☐☐☐☐

303 extension box ☐☐☐☐☐

304 locking device ☐☐☐☐☐

305 slewing bearing ☐☐☐☐☐

306 turn locking device ☐☐☐☐☐

307 support safeguard ☐☐☐☐☐

308 support plate ☐☐☐☐☐

309 fixing of jack cylinder ☐☐☐☐☐

310 jack cylinder ☐☐☐☐☐

311 swing cylinder ☐☐☐☐☐

312 telescopic-cylinder ☐☐☐☐☐

313 pressure adjustment ☐☐☐☐☐

400 outrigger rear L+R

401 transportation safety device ☐☐☐☐☐

402 outrigger ☐☐☐☐☐

403 extension box ☐☐☐☐☐

405 locking device ☐☐☐☐☐

Notes:

Inspection report for concrete booms

Inspection report Nr:	Boom type:	Machine-Nr:

Error code:

00 no objections	08 corrosion	16 porous	24 deformation
01 cracks	09 lacquer failures	17 burned through	25 bear movement
02 broken	10 fraying	18 not fixed	26 lubrication
03 leaky	11 scratched	19 clemp	27 readability
04 no function	12 bendet	20 sawing	28 missing components
05 low lifetime	13 noises	21 contaminated	29 hydraulical
06 worn out	14 vibration	22 bad contact	30 electrical
07 dirt	15 miscellaneous	23 temperature	31 reinspection required

406 slewing bearing ☐☐☐☐☐

407 turn locking device ☐☐☐☐☐

408 support safeguard ☐☐☐☐☐

409 support plate ☐☐☐☐☐

410 fixing of jack cylinder ☐☐☐☐☐

411 jack cylinder ☐☐☐☐☐

412 swing cylinder ☐☐☐☐☐

413 telescopic cylinder ☐☐☐☐☐

500 pedestal

501 pedestal mounting ☐☐☐☐☐

502 sub frame ☐☐☐☐☐

503 truck frame ☐☐☐☐☐

504 pedestal (structure) ☐☐☐☐☐

505 boom valve without leaking ☐☐☐☐☐

506 boom rest ☐☐☐☐☐

507 transportation safety device ☐☐☐☐☐

508 hydraulic line ☐☐☐☐☐

600 slewing head with ball pivot

601 slewing head ☐☐☐☐☐

602 ball pivot ring ☐☐☐☐☐

603 mounting ball pivot ring ☐☐☐☐☐

604 drive pinion ☐☐☐☐☐

605 slewing drive mounting ☐☐☐☐☐

606 slewing stop device ☐☐☐☐☐

607 slewing drive (tooth backlash) ☐☐☐☐☐

608 slewing drive ☐☐☐☐☐

609 brake function ☐☐☐☐☐

610 speed ☐☐☐☐☐

611 pressure setting ☐☐☐☐☐

612 hydraulic lines ☐☐☐☐☐

700 slewing head with slewing column

701 slewing head ☐☐☐☐☐

702 slewing column bearing ☐☐☐☐☐

703 slewing drive (tooth backlash) ☐☐☐☐☐

704 speed ☐☐☐☐☐

705 pressure settings ☐☐☐☐☐

706 hydraulic lines ☐☐☐☐☐

707 swivel cylinder ☐☐☐☐☐

Notes:

Inspection report for concrete booms

Inspection report Nr:	Boom type:	Machine-Nr:

Error code:

00 no objections	08 corrosion	16 porous	24 deformation
01 cracks	09 lacquer failures	17 burned through	25 bear movement
02 broken	10 fraying	18 not fixed	26 lubrication
03 leaky	11 scratched	19 clemp	27 readability
04 no function	12 bendet	20 sawing	28 missing components
05 low lifetime	13 noises	21 contamitated	29 hydraulical
06 worn out	14 vibration	22 bad contact	30 electrical
07 dirt	15 miscellaneous	23 temperature	31 reinspection required

800 boom
801 „Arm1“
802 bracket conveying line
803 Drop hook
804 „Arm 2“
805 bracket conveying line
806 Drop hook
807 „Arm 3“
808 bracket conveying line
809 guidance and interlock of the arm
810 „Arm 4“
811 bracket conveying line
812 guidance and interlock of the arm
813 „Arm 5“
814 bracket conveying line
815 guidance and interlock of the arm

900 joint „A“
901 boom
902 link lever
903 forcing rod
904 pin
905 cylinder
906 boom speed
907 pressure settings
908 hydraulic lines
909 load holding valve (piston side)
910 load holding valve (rod side)

1000 joint „B“
1001 boom
1002 link lever
1003 forcing rod
1004 pin
1005 cylinder
1006 boom speed
1007 pressure settings
1008 hydraulic lines
1009 load holding valve (piston side)
1010 load holding valve (rod side)

Notes:

Inspection report for concrete booms

Inspection report Nr:	Boom type:	Machine-Nr:

Error code:

00 no objections	08 corrosion	16 porous	24 deformation
01 cracks	09 lacquer failures	17 burned through	25 bear movement
02 broken	10 fraying	18 not fixed	26 lubrication
03 leaky	11 scratched	19 clemp	27 readability
04 no function	12 bendet	20 sawing	28 missing components
05 low lifetime	13 noises	21 contaminated	29 hydraulical
06 worn out	14 vibration	22 bad contact	30 electrical
07 dirt	15 miscellaneous	23 temperature	31 reinspection required

1100 joint "C"

1101 boom	☐	☐	☐	☐	☐
1102 link lever	☐	☐	☐	☐	☐
1103 forcing rod	☐	☐	☐	☐	☐
1104 pin	☐	☐	☐	☐	☐
1105 cylinder	☐	☐	☐	☐	☐
1106 boom speed	☐	☐	☐	☐	☐
1107 pressure settings	☐	☐	☐	☐	☐
1108 hydraulic lines	☐	☐	☐	☐	☐
1109 load holding valve (piston side)	☐	☐	☐	☐	☐
1110 load hokding valve (rod side)	☐	☐	☐	☐	☐

1200 joint "D"

1201 boom	☐	☐	☐	☐	☐
1202 link lever	☐	☐	☐	☐	☐
1203 forcing rod	☐	☐	☐	☐	☐
1204 pin	☐	☐	☐	☐	☐
1205 cylinder	☐	☐	☐	☐	☐
1206 boom speed	☐	☐	☐	☐	☐
1207 pressure settings	☐	☐	☐	☐	☐
1208 hydraulic lines	☐	☐	☐	☐	☐
1209 load holding valve (piston side)	☐	☐	☐	☐	☐
1210 load holding valve (rod side)	☐	☐	☐	☐	☐

1300 joint „E"

1301 boom	☐	☐	☐	☐	☐
1302 link lever	☐	☐	☐	☐	☐
1303 forcing rod	☐	☐	☐	☐	☐
1304 pin	☐	☐	☐	☐	☐
1305 cylinder	☐	☐	☐	☐	☐
1306 boom speed	☐	☐	☐	☐	☐
1307 pressure settings	☐	☐	☐	☐	☐
1308 hydraulic lines	☐	☐	☐	☐	☐
1309 load holding valve (piston side)	☐	☐	☐	☐	☐
1310 load holding valve (rod side)	☐	☐	☐	☐	☐

1400 concrete delivery line

1401 assembly of delivery line DN	☐	☐	☐	☐	☐
1402 end hose DN+lenght	☐	☐	☐	☐	☐
1403 delivery line DN	☐	☐	☐	☐	☐
1404 rotating joints of - delivery line	☐	☐	☐	☐	☐
1405 locking pin of the coupling	☐	☐	☐	☐	☐

Notes:

Inspection report for concrete booms

Inspection report Nr:	Boom type:	Machine-Nr:

Error code:

00 no objections	08 corrosion	16 porous	24 deformation
01 cracks	09 lacquer failures	17 burned through	25 bear movement
02 broken	10 fraying	18 not fixed	26 lubrication
03 leaky	11 scratched	19 clemp	27 readability
04 no function	12 bendet	20 sawing	28 missing components
05 low lifetime	13 noises	21 contamitated	29 hydraulical
06 worn out	14 vibration	22 bad contact	30 electrical
07 dirt	15 miscellaneous	23 temperature	31 reinspection required

1406 end hose safety device	☐	☐	☐	☐	☐
1407 reducer	☐	☐	☐	☐	☐
1408 gate elbow, elbow 6"	☐	☐	☐	☐	☐
1500 hydraulic system and hydraulic valves					
1501 Pressure relief valve	☐	☐	☐	☐	☐
1502 pressure settings	☐	☐	☐	☐	☐
1503 hydraulic lines	☐	☐	☐	☐	☐
1504 hand oprerating-(function)	☐	☐	☐	☐	☐
1505 boom control valve	☐	☐	☐	☐	☐
1506 hydraulic pump	☐	☐	☐	☐	☐
1600 electric equipment					
1601 remote control (functions)	☐	☐	☐	☐	☐
1602 emergency stop (function)	☐	☐	☐	☐	☐
1603 switch for outrigger function	☐	☐	☐	☐	☐
1604 switch for boom function	☐	☐	☐	☐	☐
1605 wiring harness	☐	☐	☐	☐	☐
1606 central lubrication	☐	☐	☐	☐	☐

1700 sticker sets					
1701 safety hints	☐	☐	☐	☐	☐
1702 description	☐	☐	☐	☐	☐
1703 operating	☐	☐	☐	☐	☐
1704 short operating instruction	☐	☐	☐	☐	☐
1705 sticker „ don't use the boom as crane"	☐	☐	☐	☐	☐
1706 sticker „guideline operating with boom- and concrete pump"	☐	☐	☐	☐	☐
1707 name plate	☐	☐	☐	☐	☐
1708 sticker „danger high voltage"	☐	☐	☐	☐	☐

Competent inspector:

Date: _____

Name: _____

Signature: _____
(stamp)

Customer:

Signature: _____
(stamp)

Inspection report for concrete pump

Inspection report Nr:	Machine-Nr:	Hours of operation:
		Concrete output m³:
Company:	Post code:	City:

NL | WV

Proof – Result of the tests

without defects	defects	reinspection required	**shut down**
☐	☐	☐	☐

Reinspection until date:.....

Error code:

00 no objections	08 corrosion	16 porous	24 deformation
01 cracks	09 lacquer failures	17 burned through	25 bear movement
02 broken	10 fraying	18 not fixed	26 lubrication
03 leaky	11 scratched	19 clemp	27 readability
04 no fuction	12 bendet	20 sawing	28 missing components
05 low livetime	13 noises	21 contaminated	29 hydraulical
06 worn out	14 vibration	22 bad contact	30 electrical
07 dirt	15 miscellaneous	23 temperature	31 reinspection required

2000 documents					
2001 operating manual	☐	☐	☐	☐	☐
2002 spare parts list	☐	☐	☐	☐	☐
2100 drive assembly					
2101 coupling and flange	☐	☐	☐	☐	☐
2200 gear box	☐	☐	☐	☐	☐
2300 hydraulic pump (main)	☐	☐	☐	☐	☐
2400 oil-tank	☐	☐	☐	☐	☐
2500 drive shaft	☐	☐	☐	☐	☐

2700 hydraulic control system					
2701 pressure relief valve	☐	☐	☐	☐	☐
2702 pressure setting	☐	☐	☐	☐	☐
2703 hydraulic line	☐	☐	☐	☐	☐
2704 mechanical operation by hand	☐	☐	☐	☐	☐
2800 oil –cooler	☐	☐	☐	☐	☐
2900 accumulator	☐	☐	☐	☐	☐
2901 proofs of the required tests according to accumulator regulation	☐	☐	☐	☐	☐
2902 pressure gauge	☐	☐	☐	☐	☐

Notes:

Inspection report for concrete pump

Inspection report Nr:

Machine-Nr:

Error code:

00 no objections	08 corrosion	16 porous	24 deformation
01 cracks	09 lacquer failures	17 burned through	25 bear movement
02 broken	10 fraying	18 not fixed	26 lubrication
03 leaky	11 scratched	19 clemp	27 readability
04 no function	12 bendet	20 sawing	28 missing components
05 low lifetime	13 noises	21 contamitated	29 hydraulical
06 worn out	14 vibration	22 bad contact	30 electrical
07 dirt	15 miscellaneous	23 temperature	31 reinspection required

3000 central lubrication	☐☐☐☐☐
3100 hydraulic motor	☐☐☐☐☐
3200 hydraulic lines	☐☐☐☐☐
3300 air compressor	☐☐☐☐☐
3400 control panel	☐☐☐☐☐
3500 concrete pump	☐☐☐☐☐
3700 S-valve	☐☐☐☐☐
3800 hopper	☐☐☐☐☐
4100 sub frame	☐☐☐☐☐
4200 water tank	☐☐☐☐☐
4300 axle	☐☐☐☐☐
4400 water pump	☐☐☐☐☐
4500 vibrator	☐☐☐☐☐

4600 safety guards, equipment	
4601 stair	☐☐☐☐☐
4602 safety for stair	☐☐☐☐☐
4603 handrail	☐☐☐☐☐
4604 hopper grid (fixing device)	☐☐☐☐☐
4606 distance of grid rods	☐☐☐☐☐
4607 distance from grid to agitator	☐☐☐☐☐
4609 agitator have to stop if grid is open	☐☐☐☐☐
4610 accumulator have to dump if grid is open	☐☐☐☐☐
4612 cleaning flap hopper	☐☐☐☐☐
4613 safety grid into water box	☐☐☐☐☐

Notes:

Inspection report for concrete pump

Inspection report Nr:

Machine-Nr:

Error code:

00 no objections	08 corrosion	16 porous	24 deformation
01 cracks	09 lacquer failures	17 burned through	25 bear movement
02 broken	10 fraying	18 not fixed	26 lubrication
03 leaky	11 scratched	19 clemp	27 readability
04 no function	12 bendet	20 sawing	28 missing components
05 low lifetime	13 noises	21 contamitated	29 hydraulical
06 worn out	14 vibration	22 bad contact	30 electrical
07 dirt	15 miscellaneous	23 temperature	31 reinspection required

4614 cover for rotating wave ☐☐☐☐☐

4616 cover for chains ☐☐☐☐☐

4617 cover for shift cylinder ☐☐☐☐☐

4618 cover for moving parts ☐☐☐☐☐

4619 cover for the exhaust pipe ☐☐☐☐☐

4700 electrical system

4701 function of actuator component ☐☐☐☐☐

4702 emergency stop function ☐☐☐☐☐

4703 ground connections ☐☐☐☐☐

4704 cables and wiring harness ☐☐☐☐☐

4705 temperature switch ☐☐☐☐☐

4800 outtrigger - system

4801 transportation lock ☐☐☐☐☐

4802 locking device ☐☐☐☐☐

4803 backing plate ☐☐☐☐☐

4804 jack cylinder connections ☐☐☐☐☐

4805 pressure adjustment of jack cylinder ☐☐☐☐☐

4900 miscellaneous

4901 additional assembled part from operator ☐☐☐☐☐

4902 changes through operator ☐☐☐☐☐

Competent inspector:

Date: .....

Name: .....

Signature: .....
(stamp)

Customer:

Signature: .....
(stamp)

This test report is filed into the test book

Inspection report for concrete booms

Inspection report –Nr:	Machine-Nr	Hours of operation:	
		Concrete output m³:	
Company:	Post code:	City:	
Boom Type:	Boom Nr.	NL	WV

Proof – Result of the Tests

without defects	defects	reinspection required	**shut down**
☐	☐	☐	☐

Reinspection until date:.....

Error code:

00 no objections	08 corrosion	16 porous	24 deformation
01 cracks	09 lacquer failures	17 burned through	25 bear movement
02 broken	10 fraying	18 not fixed	26 lubrication
03 leaky	11 scratched	19 clemp	27 readability
04 no function	12 bendet	20 sawing	28 missing components
05 low lifetime	13 noises	21 contaminated	29 hydraulical
06 worn out	14 vibration	22 bad contact	30 electrical
07 dirt	15 miscellaneous	23 temperature	31 reinspection required

100 documents										
101 instruction manual	☐	☐	☐	☐	☐					
102 spare parts list	☐	☐	☐	☐	☐					
200 sub frame										
201 frame connection cpl.	☐	☐	☐	☐	☐					
300 outrigger front R+L										
301 transportation safety device	☐	☐	☐	☐	☐					
302 outrigger	☐	☐	☐	☐	☐					
303 extension box	☐	☐	☐	☐	☐					
304 locking device	☐	☐	☐	☐	☐					
305 slewing bearing	☐	☐	☐	☐	☐					
306 turn locking device	☐	☐	☐	☐	☐					
307 support safeguard	☐	☐	☐	☐	☐					
308 support plate	☐	☐	☐	☐	☐					
309 fixing of jack cylinder	☐	☐	☐	☐	☐					
310 jack cylinder	☐	☐	☐	☐	☐					
311 swing cylinder	☐	☐	☐	☐	☐					
312 telescopic-cylinder	☐	☐	☐	☐	☐					
313 pressure adjustment	☐	☐	☐	☐	☐					
400 outrigger rear L+R										
401 transportation safety device	☐	☐	☐	☐	☐					
402 outrigger	☐	☐	☐	☐	☐					
403 extension box	☐	☐	☐	☐	☐					
405 locking device	☐	☐	☐	☐	☐					

Notes:

Inspection report for concrete booms

Inspection report Nr:	Boom type:	Machine-Nr:

Error code:

00 no objections	08 corrosion	16 porous	24 deformation
01 cracks	09 lacquer failures	17 burned through	25 bear movement
02 broken	10 fraying	18 not fixed	26 lubrication
03 leaky	11 scratched	19 clemp	27 readability
04 no function	12 bendet	20 sawing	28 missing components
05 low lifetime	13 noises	21 contaminated	29 hydraulical
06 worn out	14 vibration	22 bad contact	30 electrical
07 dirt	15 miscellaneous	23 temperature	31 reinspection required

406 slewing bearing ☐☐☐☐☐

407 turn locking device ☐☐☐☐☐

408 support safeguard ☐☐☐☐☐

409 support plate ☐☐☐☐☐

410 fixing of jack cylinder ☐☐☐☐☐

411 jack cylinder ☐☐☐☐☐

412 swing cylinder ☐☐☐☐☐

413 telescopic cylinder ☐☐☐☐☐

500 pedestal

501 pedestal mounting ☐☐☐☐☐

502 sub frame ☐☐☐☐☐

503 truck frame ☐☐☐☐☐

504 pedestal (structure) ☐☐☐☐☐

505 boom valve without leaking ☐☐☐☐☐

506 boom rest ☐☐☐☐☐

507 transportation safety device ☐☐☐☐☐

508 hydraulic line ☐☐☐☐☐

600 slewing head with ball pivot

601 slewing head ☐☐☐☐☐

602 ball pivot ring ☐☐☐☐☐

603 mounting ball pivot ring ☐☐☐☐☐

604 drive pinion ☐☐☐☐☐

605 slewing drive mounting ☐☐☐☐☐

606 slewing stop device ☐☐☐☐☐

607 slewing drive (tooth backlash) ☐☐☐☐☐

608 slewing drive ☐☐☐☐☐

609 brake function ☐☐☐☐☐

610 speed ☐☐☐☐☐

611 pressure setting ☐☐☐☐☐

612 hydraulic lines ☐☐☐☐☐

700 slewing head with slewing column

701 slewing head ☐☐☐☐☐

702 slewing column bearing ☐☐☐☐☐

703 slewing drive (tooth backlash) ☐☐☐☐☐

704 speed ☐☐☐☐☐

705 pressure settings ☐☐☐☐☐

706 hydraulic lines ☐☐☐☐☐

707 swivel cylinder ☐☐☐☐☐

Notes:

Inspection report for concrete booms

Inspection report Nr:	Boom type:	Machine-Nr:

Error code:

00 no objections	08 corrosion	16 porous	24 deformation
01 cracks	09 lacquer failures	17 burned through	25 bear movement
02 broken	10 fraying	18 not fixed	26 lubrication
03 leaky	11 scratched	19 clemp	27 readability
04 no function	12 bendet	20 sawing	28 missing components
05 low lifetime	13 noises	21 contamitated	29 hydraulical
06 worn out	14 vibration	22 bad contact	30 electrical
07 dirt	15 miscellaneous	23 temperature	31 reinspection required

800 boom					
801 „Arm1“	☐	☐	☐	☐	☐
802 bracket conveying line	☐	☐	☐	☐	☐
803 Drop hook	☐	☐	☐	☐	☐
804 „Arm 2“	☐	☐	☐	☐	☐
805 bracket conveying line	☐	☐	☐	☐	☐
806 Drop hook	☐	☐	☐	☐	☐
807 „Arm 3“	☐	☐	☐	☐	☐
808 bracket conveying line	☐	☐	☐	☐	☐
809 guidance and interlock of the arm	☐	☐	☐	☐	☐
810 „Arm 4“	☐	☐	☐	☐	☐
811 bracket conveying line	☐	☐	☐	☐	☐
812 guidance and interlock of the arm	☐	☐	☐	☐	☐
813 „Arm 5“	☐	☐	☐	☐	☐
814 bracket conveying line	☐	☐	☐	☐	☐
815 guidance and interlock of the arm	☐	☐	☐	☐	☐
900 joint „A“	☐	☐	☐	☐	☐
901 boom	☐	☐	☐	☐	☐
902 link lever	☐	☐	☐	☐	☐
903 forcing rod	☐	☐	☐	☐	☐
904 pin	☐	☐	☐	☐	☐
905 cylinder	☐	☐	☐	☐	☐
906 boom speed	☐	☐	☐	☐	☐
907 pressure settings	☐	☐	☐	☐	☐
908 hydraulic lines	☐	☐	☐	☐	☐
909 load holding valve (piston side)	☐	☐	☐	☐	☐
910 load holding valve (rod side)	☐	☐	☐	☐	☐
1000 joint „B“					
1001 boom	☐	☐	☐	☐	☐
1002 link lever	☐	☐	☐	☐	☐
1003 forcing rod	☐	☐	☐	☐	☐
1004 pin	☐	☐	☐	☐	☐
1005 cylinder	☐	☐	☐	☐	☐
1006 boom speed	☐	☐	☐	☐	☐
1007 pressure settings	☐	☐	☐	☐	☐
1008 hydraulic lines	☐	☐	☐	☐	☐
1009 load holding valve (piston side)	☐	☐	☐	☐	☐
1010 load holding valve (rod side)	☐	☐	☐	☐	☐

Notes:

Inspection report for concrete booms

Inspection report Nr:	Boom type:	Machine-Nr:

Error code:

00 no objections	08 corrosion	16 porous	24 deformation
01 cracks	09 lacquer failures	17 burned through	25 bear movement
02 broken	10 fraying	18 not fixed	26 lubrication
03 leaky	11 scratched	19 clemp	27 readability
04 no function	12 bendet	20 sawing	28 missing components
05 low lifetime	13 noises	21 contaminated	29 hydraulical
06 worn out	14 vibration	22 bad contact	30 electrical
07 dirt	15 miscellaneous	23 temperature	31 reinspection required

1100 joint "C"					
1101 boom	☐	☐	☐	☐	☐
1102 link lever	☐	☐	☐	☐	☐
1103 forcing rod	☐	☐	☐	☐	☐
1104 pin	☐	☐	☐	☐	☐
1105 cylinder	☐	☐	☐	☐	☐
1106 boom speed	☐	☐	☐	☐	☐
1107 pressure settings	☐	☐	☐	☐	☐
1108 hydraulic lines	☐	☐	☐	☐	☐
1109 load holding valve (piston side)	☐	☐	☐	☐	☐
1110 load hokding valve (rod side)	☐	☐	☐	☐	☐
1200 joint "D"					
1201 boom	☐	☐	☐	☐	☐
1202 link lever	☐	☐	☐	☐	☐
1203 forcing rod	☐	☐	☐	☐	☐
1204 pin	☐	☐	☐	☐	☐
1205 cylinder	☐	☐	☐	☐	☐
1206 boom speed	☐	☐	☐	☐	☐
1207 pressure settings	☐	☐	☐	☐	☐
1208 hydraulic lines	☐	☐	☐	☐	☐
1209 load holding valve (piston side)	☐	☐	☐	☐	☐
1210 load holding valve (rod side)	☐	☐	☐	☐	☐

1300 joint „E"					
1301 boom	☐	☐	☐	☐	☐
1302 link lever	☐	☐	☐	☐	☐
1303 forcing rod	☐	☐	☐	☐	☐
1304 pin	☐	☐	☐	☐	☐
1305 cylinder	☐	☐	☐	☐	☐
1306 boom speed	☐	☐	☐	☐	☐
1307 pressure settings	☐	☐	☐	☐	☐
1308 hydraulic lines	☐	☐	☐	☐	☐
1309 load holding valve (piston side)	☐	☐	☐	☐	☐
1310 load holding valve (rod side)	☐	☐	☐	☐	☐
1400 concrete delivery line					
1401 assembly of delivery line DN	☐	☐	☐	☐	☐
1402 end hose DN+lenght	☐	☐	☐	☐	☐
1403 delivery line DN	☐	☐	☐	☐	☐
1404 rotating joints of - delivery line	☐	☐	☐	☐	☐
1405 locking pin of the coupling	☐	☐	☐	☐	☐

Notes:

Inspection report for concrete booms

Inspection report Nr:	Boom type:	Machine-Nr:

Error code:

00 no objections	08 corrosion	16 porous	24 deformation
01 cracks	09 lacquer failures	17 burned through	25 bear movement
02 broken	10 fraying	18 not fixed	26 lubrication
03 leaky	11 scratched	19 clemp	27 readability
04 no function	12 bendet	20 sawing	28 missing components
05 low lifetime	13 noises	21 contamitated	29 hydraulical
06 worn out	14 vibration	22 bad contact	30 electrical
07 dirt	15 miscellaneous	23 temperature	31 reinspection required

1406 end hose safety device	☐	☐	☐	☐	☐
1407 reducer	☐	☐	☐	☐	☐
1408 gate elbow, elbow 6"	☐	☐	☐	☐	☐
1500 hydraulic system and hydraulic valves					
1501 Pressure relief valve	☐	☐	☐	☐	☐
1502 pressure settings	☐	☐	☐	☐	☐
1503 hydraulic lines	☐	☐	☐	☐	☐
1504 hand oprerating-(function)	☐	☐	☐	☐	☐
1505 boom control valve	☐	☐	☐	☐	☐
1506 hydraulic pump	☐	☐	☐	☐	☐
1600 electric equipment					
1601 remote control (functions)	☐	☐	☐	☐	☐
1602 emergency stop (function)	☐	☐	☐	☐	☐
1603 switch for outrigger function	☐	☐	☐	☐	☐
1604 switch for boom function	☐	☐	☐	☐	☐
1605 wiring harness	☐	☐	☐	☐	☐
1606 central lubrication	☐	☐	☐	☐	☐

1700 sticker sets					
1701 safety hints	☐	☐	☐	☐	☐
1702 description	☐	☐	☐	☐	☐
1703 operating	☐	☐	☐	☐	☐
1704 short operating instruction	☐	☐	☐	☐	☐
1705 sticker „ don´t use the boom as crane"	☐	☐	☐	☐	☐
1706 sticker „guideline operating with boom- and concrete pump"	☐	☐	☐	☐	☐
1707 name plate	☐	☐	☐	☐	☐
1708 sticker „danger high voltage"	☐	☐	☐	☐	☐

Competent inspector:

Date: _____

Name: _____

Signature: _____
(stamp)

Customer:

Signature: _____
(stamp)

Inspection report for concrete pump

Inspection report Nr:	Machine-Nr:	Hours of operation:
		Concrete output m³:
Company:	Post code:	City:

NL WV

Proof – Result of the tests

without defects	defects	reinspection required	**shut down**
☐	☐	☐	☐

Reinspection until date:.....

Error code:

00 no objections	08 corrosion	16 porous	24 deformation
01 cracks	09 lacquer failures	17 burned through	25 bear movement
02 broken	10 fraying	18 not fixed	26 lubrication
03 leaky	11 scratched	19 clemp	27 readability
04 no fuction	12 bendet	20 sawing	28 missing components
05 low livetime	13 noises	21 contaminated	29 hydraulical
06 worn out	14 vibration	22 bad contact	30 electrical
07 dirt	15 miscellaneous	23 temperature	31 reinspection required

2000 documents					**2700 hydraulic control system**					
2001 operating manual	☐	☐	☐	☐	☐	2701 pressure relief valve	☐	☐	☐	☐	☐
2002 spare parts list	☐	☐	☐	☐	☐	2702 pressure setting	☐	☐	☐	☐	☐
2100 drive assembly						2703 hydraulic line	☐	☐	☐	☐	☐
2101 coupling and flange	☐	☐	☐	☐	☐	2704 mechanical operation by hand	☐	☐	☐	☐	☐
2200 gear box	☐	☐	☐	☐	☐	**2800 oil –cooler**	☐	☐	☐	☐	☐
2300 hydraulic pump (main)	☐	☐	☐	☐	☐	**2900 accumulator**	☐	☐	☐	☐	☐
2400 oil-tank	☐	☐	☐	☐	☐	2901 proofs of the required tests according to accumulator regulation	☐	☐	☐	☐	☐
2500 drive shaft	☐	☐	☐	☐	☐	2902 pressure gauge	☐	☐	☐	☐	☐

Notes:

Inspection report for concrete pump

Inspection report Nr:

Machine-Nr:

Error code:

00 no objections	08 corrosion	16 porous	24 deformation
01 cracks	09 lacquer failures	17 burned through	25 bear movement
02 broken	10 fraying	18 not fixed	26 lubrication
03 leaky	11 scratched	19 clemp	27 readability
04 no function	12 bendet	20 sawing	28 missing components
05 low lifetime	13 noises	21 contamitated	29 hydraulical
06 worn out	14 vibration	22 bad contact	30 electrical
07 dirt	15 miscellaneous	23 temperature	31 reinspection required

3000 central lubrication	
3100 hydraulic motor	
3200 hydraulic lines	
3300 air compressor	
3400 control panel	
3500 concrete pump	
3700 S-valve	
3800 hopper	
4100 sub frame	
4200 water tank	
4300 axle	
4400 water pump	
4500 vibrator	

4600 safety guards, equipment	
4601 stair	
4602 safety for stair	
4603 handrail	
4604 hopper grid (fixing device)	
4606 distance of grid rods	
4607 distance from grid to agitator	
4609 agitator have to stop if grid is open	
4610 accumulator have to dump if grid is open	
4612 cleaning flap hopper	
4613 safety grid into water box	

Notes:

Inspection report for concrete pump

Inspection report Nr: | Machine-Nr:

Error code:

00 no objections	08 corrosion	16 porous	24 deformation
01 cracks	09 lacquer failures	17 burned through	25 bear movement
02 broken	10 fraying	18 not fixed	26 lubrication
03 leaky	11 scratched	19 clemp	27 readability
04 no function	12 bendet	20 sawing	28 missing components
05 low lifetime	13 noises	21 contamitated	29 hydraulical
06 worn out	14 vibration	22 bad contact	30 electrical
07 dirt	15 miscellaneous	23 temperature	31 reinspection required

4614 cover for rotating wave ☐☐☐☐☐

4616 cover for chains ☐☐☐☐☐

4617 cover for shift cylinder ☐☐☐☐☐

4618 cover for moving parts ☐☐☐☐☐

4619 cover for the exhaust pipe ☐☐☐☐☐

4700 electrical system

4701 function of actuator component ☐☐☐☐☐

4702 emergency stop function ☐☐☐☐☐

4703 ground connections ☐☐☐☐☐

4704 cables and wiring harness ☐☐☐☐☐

4705 temperature switch ☐☐☐☐☐

4800 outtrigger - system

4801 transportation lock ☐☐☐☐☐

4802 locking device ☐☐☐☐☐

4803 backing plate ☐☐☐☐☐

4804 jack cylinder connections ☐☐☐☐☐

4805 pressure adjustment of jack cylinder ☐☐☐☐☐

4900 miscellaneous

4901 additional assembled part from operator ☐☐☐☐☐

4902 changes through operator ☐☐☐☐☐

Competent inspector:

Date: .....

Name: .....

Signature: .....
(stamp)

Customer:

Signature: .....
(stamp)

This test report is filed into the test book

Inspection report for concrete booms

Inspection report –Nr:	Machine-Nr	Hours of operation:	
		Concrete output m³:	
Company:	Post code:	City:	
Boom Type:	Boom Nr.	NL	WV

Proof – Result of the Tests

without defects	defects	reinspection required	**shut down**
☐	☐	☐	☐

Reinspection until date:.....

Error code:

00 no objections	08 corrosion	16 porous	24 deformation
01 cracks	09 lacquer failures	17 burned through	25 bear movement
02 broken	10 fraying	18 not fixed	26 lubrication
03 leaky	11 scratched	19 clemp	27 readability
04 no function	12 bendet	20 sawing	28 missing components
05 low lifetime	13 noises	21 contaminated	29 hydraulical
06 worn out	14 vibration	22 bad contact	30 electrical
07 dirt	15 miscellaneous	23 temperature	31 reinspection required

100 documents

101 instruction manual ☐☐☐☐☐

102 spare parts list ☐☐☐☐☐

200 sub frame

201 frame connection cpl. ☐☐☐☐☐

300 outrigger front R+L

301 transportation safety device ☐☐☐☐☐

302 outrigger ☐☐☐☐☐

303 extension box ☐☐☐☐☐

304 locking device ☐☐☐☐☐

305 slewing bearing ☐☐☐☐☐

306 turn locking device ☐☐☐☐☐

307 support safeguard ☐☐☐☐☐

308 support plate ☐☐☐☐☐

309 fixing of jack cylinder ☐☐☐☐☐

310 jack cylinder ☐☐☐☐☐

311 swing cylinder ☐☐☐☐☐

312 telescopic-cylinder ☐☐☐☐☐

313 pressure adjustment ☐☐☐☐☐

400 outrigger rear L+R

401 transportation safety device ☐☐☐☐☐

402 outrigger ☐☐☐☐☐

403 extension box ☐☐☐☐☐

405 locking device ☐☐☐☐☐

Notes:

Inspection report for concrete booms

Inspection report Nr:	Boom type:	Machine-Nr:

Error code:

00 no objections	08 corrosion	16 porous	24 deformation
01 cracks	09 lacquer failures	17 burned through	25 bear movement
02 broken	10 fraying	18 not fixed	26 lubrication
03 leaky	11 scratched	19 clemp	27 readability
04 no function	12 bendet	20 sawing	28 missing components
05 low lifetime	13 noises	21 contaminated	29 hydraulical
06 worn out	14 vibration	22 bad contact	30 electrical
07 dirt	15 miscellaneous	23 temperature	31 reinspection required

406 slewing bearing ☐☐☐☐☐

407 turn locking device ☐☐☐☐☐

408 support safeguard ☐☐☐☐☐

409 support plate ☐☐☐☐☐

410 fixing of jack cylinder ☐☐☐☐☐

411 jack cylinder ☐☐☐☐☐

412 swing cylinder ☐☐☐☐☐

413 telescopic cylinder ☐☐☐☐☐

500 pedestal

501 pedestal mounting ☐☐☐☐☐

502 sub frame ☐☐☐☐☐

503 truck frame ☐☐☐☐☐

504 pedestal (structure) ☐☐☐☐☐

505 boom valve without leaking ☐☐☐☐☐

506 boom rest ☐☐☐☐☐

507 transportation safety device ☐☐☐☐☐

508 hydraulic line ☐☐☐☐☐

600 slewing head with ball pivot

601 slewing head ☐☐☐☐☐

602 ball pivot ring ☐☐☐☐☐

603 mounting ball pivot ring ☐☐☐☐☐

604 drive pinion ☐☐☐☐☐

605 slewing drive mounting ☐☐☐☐☐

606 slewing stop device ☐☐☐☐☐

607 slewing drive (tooth backlash) ☐☐☐☐☐

608 slewing drive ☐☐☐☐☐

609 brake function ☐☐☐☐☐

610 speed ☐☐☐☐☐

611 pressure setting ☐☐☐☐☐

612 hydraulic lines ☐☐☐☐☐

700 slewing head with slewing column

701 slewing head ☐☐☐☐☐

702 slewing column bearing ☐☐☐☐☐

703 slewing drive (tooth backlash) ☐☐☐☐☐

704 speed ☐☐☐☐☐

705 pressure settings ☐☐☐☐☐

706 hydraulic lines ☐☐☐☐☐

707 swivel cylinder ☐☐☐☐☐

Notes:

Inspection report for concrete booms

Inspection report Nr:	Boom type:	Machine-Nr:

Error code:

00 no objections	08 corrosion	16 porous	24 deformation
01 cracks	09 lacquer failures	17 burned through	25 bear movement
02 broken	10 fraying	18 not fixed	26 lubrication
03 leaky	11 scratched	19 clemp	27 readability
04 no function	12 bendet	20 sawing	28 missing components
05 low lifetime	13 noises	21 contamitated	29 hydraulical
06 worn out	14 vibration	22 bad contact	30 electrical
07 dirt	15 miscellaneous	23 temperature	31 reinspection required

800 boom					
801 „Arm1“	☐	☐	☐	☐	☐
802 bracket conveying line	☐	☐	☐	☐	☐
803 Drop hook	☐	☐	☐	☐	☐
804 „Arm 2“	☐	☐	☐	☐	☐
805 bracket conveying line	☐	☐	☐	☐	☐
806 Drop hook	☐	☐	☐	☐	☐
807 „Arm 3“	☐	☐	☐	☐	☐
808 bracket conveying line	☐	☐	☐	☐	☐
809 guidance and interlock of the arm	☐	☐	☐	☐	☐
810 „Arm 4“	☐	☐	☐	☐	☐
811 bracket conveying line	☐	☐	☐	☐	☐
812 guidance and interlock of the arm	☐	☐	☐	☐	☐
813 „Arm 5“	☐	☐	☐	☐	☐
814 bracket conveying line	☐	☐	☐	☐	☐
815 guidance and interlock of the arm	☐	☐	☐	☐	☐
900 joint „A“	☐	☐	☐	☐	☐
901 boom	☐	☐	☐	☐	☐
902 link lever	☐	☐	☐	☐	☐
903 forcing rod	☐	☐	☐	☐	☐
904 pin	☐	☐	☐	☐	☐
905 cylinder	☐	☐	☐	☐	☐
906 boom speed	☐	☐	☐	☐	☐
907 pressure settings	☐	☐	☐	☐	☐
908 hydraulic lines	☐	☐	☐	☐	☐
909 load holding valve (piston side)	☐	☐	☐	☐	☐
910 load holding valve (rod side)	☐	☐	☐	☐	☐
1000 joint „B“					
1001 boom	☐	☐	☐	☐	☐
1002 link lever	☐	☐	☐	☐	☐
1003 forcing rod	☐	☐	☐	☐	☐
1004 pin	☐	☐	☐	☐	☐
1005 cylinder	☐	☐	☐	☐	☐
1006 boom speed	☐	☐	☐	☐	☐
1007 pressure settings	☐	☐	☐	☐	☐
1008 hydraulic lines	☐	☐	☐	☐	☐
1009 load holding valve (piston side)	☐	☐	☐	☐	☐
1010 load holding valve (rod side)	☐	☐	☐	☐	☐

Notes:

Inspection report for concrete booms

Inspection report Nr:	Boom type:	Machine-Nr:

Error code:

00 no objections	08 corrosion	16 porous	24 deformation
01 cracks	09 lacquer failures	17 burned through	25 bear movement
02 broken	10 fraying	18 not fixed	26 lubrication
03 leaky	11 scratched	19 clemp	27 readability
04 no function	12 bendet	20 sawing	28 missing components
05 low lifetime	13 noises	21 contaminated	29 hydraulical
06 worn out	14 vibration	22 bad contact	30 electrical
07 dirt	15 miscellaneous	23 temperature	31 reinspection required

1100 joint "C"

1101 boom	☐	☐	☐	☐	☐
1102 link lever	☐	☐	☐	☐	☐
1103 forcing rod	☐	☐	☐	☐	☐
1104 pin	☐	☐	☐	☐	☐
1105 cylinder	☐	☐	☐	☐	☐
1106 boom speed	☐	☐	☐	☐	☐
1107 pressure settings	☐	☐	☐	☐	☐
1108 hydraulic lines	☐	☐	☐	☐	☐
1109 load holding valve (piston side)	☐	☐	☐	☐	☐
1110 load hokding valve (rod side)	☐	☐	☐	☐	☐

1200 joint "D"

1201 boom	☐	☐	☐	☐	☐
1202 link lever	☐	☐	☐	☐	☐
1203 forcing rod	☐	☐	☐	☐	☐
1204 pin	☐	☐	☐	☐	☐
1205 cylinder	☐	☐	☐	☐	☐
1206 boom speed	☐	☐	☐	☐	☐
1207 pressure settings	☐	☐	☐	☐	☐
1208 hydraulic lines	☐	☐	☐	☐	☐
1209 load holding valve (piston side)	☐	☐	☐	☐	☐
1210 load holding valve (rod side)	☐	☐	☐	☐	☐

1300 joint „E"

1301 boom	☐	☐	☐	☐	☐
1302 link lever	☐	☐	☐	☐	☐
1303 forcing rod	☐	☐	☐	☐	☐
1304 pin	☐	☐	☐	☐	☐
1305 cylinder	☐	☐	☐	☐	☐
1306 boom speed	☐	☐	☐	☐	☐
1307 pressure settings	☐	☐	☐	☐	☐
1308 hydraulic lines	☐	☐	☐	☐	☐
1309 load holding valve (piston side)	☐	☐	☐	☐	☐
1310 load holding valve (rod side)	☐	☐	☐	☐	☐

1400 concrete delivery line

1401 assembly of delivery line DN	☐	☐	☐	☐	☐
1402 end hose DN+lenght	☐	☐	☐	☐	☐
1403 delivery line DN	☐	☐	☐	☐	☐
1404 rotating joints of - delivery line	☐	☐	☐	☐	☐
1405 locking pin of the coupling	☐	☐	☐	☐	☐

Notes:

Inspection report for concrete booms

Inspection report Nr:	Boom type:	Machine-Nr:

Error code:

00 no objections	08 corrosion	16 porous	24 deformation
01 cracks	09 lacquer failures	17 burned through	25 bear movement
02 broken	10 fraying	18 not fixed	26 lubrication
03 leaky	11 scratched	19 clemp	27 readability
04 no function	12 bendet	20 sawing	28 missing components
05 low lifetime	13 noises	21 contamitated	29 hydraulical
06 worn out	14 vibration	22 bad contact	30 electrical
07 dirt	15 miscellaneous	23 temperature	31 reinspection required

1406 end hose safety device	☐	☐	☐	☐	☐
1407 reducer	☐	☐	☐	☐	☐
1408 gate elbow, elbow 6"	☐	☐	☐	☐	☐
1500 hydraulic system and hydraulic valves					
1501 Pressure relief valve	☐	☐	☐	☐	☐
1502 pressure settings	☐	☐	☐	☐	☐
1503 hydraulic lines	☐	☐	☐	☐	☐
1504 hand oprerating-(function)	☐	☐	☐	☐	☐
1505 boom control valve	☐	☐	☐	☐	☐
1506 hydraulic pump	☐	☐	☐	☐	☐
1600 electric equipment					
1601 remote control (functions)	☐	☐	☐	☐	☐
1602 emergency stop (function)	☐	☐	☐	☐	☐
1603 switch for outrigger function	☐	☐	☐	☐	☐
1604 switch for boom function	☐	☐	☐	☐	☐
1605 wiring harness	☐	☐	☐	☐	☐
1606 central lubrication	☐	☐	☐	☐	☐

1700 sticker sets					
1701 safety hints	☐	☐	☐	☐	☐
1702 description	☐	☐	☐	☐	☐
1703 operating	☐	☐	☐	☐	☐
1704 short operating instruction	☐	☐	☐	☐	☐
1705 sticker „don't use the boom as crane"	☐	☐	☐	☐	☐
1706 sticker „guideline operating with boom- and concrete pump"	☐	☐	☐	☐	☐
1707 name plate	☐	☐	☐	☐	☐
1708 sticker „danger high voltage"	☐	☐	☐	☐	☐

Competent inspector:

Date: _____

Name: _____

Signature: _____
(stamp)

Customer:

Signature: _____
(stamp)

Inspection report for concrete pump

Inspection report Nr:	Machine-Nr:	Hours of operation:
		Concrete output m³:
Company:	Post code:	City:

NL | WV

Proof – Result of the tests

without defects	defects	reinspection required	**shut down**
☐	☐	☐	☐

Reinspection until date:.....

Error code:

00 no objections	08 corrosion	16 porous	24 deformation
01 cracks	09 lacquer failures	17 burned through	25 bear movement
02 broken	10 fraying	18 not fixed	26 lubrication
03 leaky	11 scratched	19 clemp	27 readability
04 no fuction	12 bendet	20 sawing	28 missing components
05 low livetime	13 noises	21 contaminated	29 hydraulical
06 worn out	14 vibration	22 bad contact	30 electrical
07 dirt	15 miscellaneous	23 temperature	31 reinspection required

2000 documents

2001 operating manual ☐☐☐☐☐

2002 spare parts list ☐☐☐☐☐

2100 drive assembly

2101 coupling and flange ☐☐☐☐☐

2200 gear box ☐☐☐☐☐

2300 hydraulic pump (main) ☐☐☐☐☐

2400 oil-tank ☐☐☐☐☐

2500 drive shaft ☐☐☐☐☐

2700 hydraulic control system

2701 pressure relief valve ☐☐☐☐☐

2702 pressure setting ☐☐☐☐☐

2703 hydraulic line ☐☐☐☐☐

2704 mechanical operation by hand ☐☐☐☐☐

2800 oil –cooler ☐☐☐☐☐

2900 accumulator ☐☐☐☐☐

2901 proofs of the required tests according to accumulator regulation ☐☐☐☐☐

2902 pressure gauge ☐☐☐☐☐

Notes:

Inspection report for concrete pump

Inspection report Nr:

Machine-Nr:

Error code:

00 no objections	08 corrosion	16 porous	24 deformation
01 cracks	09 lacquer failures	17 burned through	25 bear movement
02 broken	10 fraying	18 not fixed	26 lubrication
03 leaky	11 scratched	19 clemp	27 readability
04 no function	12 bendet	20 sawing	28 missing components
05 low lifetime	13 noises	21 contamitated	29 hydraulical
06 worn out	14 vibration	22 bad contact	30 electrical
07 dirt	15 miscellaneous	23 temperature	31 reinspection required

3000 central lubrication	☐	☐	☐	☐	☐	
3100 hydraulic motor	☐	☐	☐	☐	☐	
3200 hydraulic lines	☐	☐	☐	☐	☐	
3300 air compressor	☐	☐	☐	☐	☐	
3400 control panel	☐	☐	☐	☐	☐	
3500 concrete pump	☐	☐	☐	☐	☐	
3700 S-valve	☐	☐	☐	☐	☐	
3800 hopper	☐	☐	☐	☐	☐	
4100 sub frame	☐	☐	☐	☐	☐	
4200 water tank	☐	☐	☐	☐	☐	
4300 axle	☐	☐	☐	☐	☐	
4400 water pump	☐	☐	☐	☐	☐	
4500 vibrator	☐	☐	☐	☐	☐	

4600 safety guards, equipment						
4601 stair	☐	☐	☐	☐	☐	
4602 safety for stair	☐	☐	☐	☐	☐	
4603 handrail	☐	☐	☐	☐	☐	
4604 hopper grid (fixing device)	☐	☐	☐	☐	☐	
4606 distance of grid rods	☐	☐	☐	☐	☐	
4607 distance from grid to agitator	☐	☐	☐	☐	☐	
4609 agitator have to stop if grid is open	☐	☐	☐	☐	☐	
4610 accumulator have to dump if grid is open	☐	☐	☐	☐	☐	
4612 cleaning flap hopper	☐	☐	☐	☐	☐	
4613 safety grid into water box	☐	☐	☐	☐	☐	

Notes:

Inspection report for concrete pump

Inspection report Nr: | Machine-Nr:

Error code:

00 no objections	08 corrosion	16 porous	24 deformation
01 cracks	09 lacquer failures	17 burned through	25 bear movement
02 broken	10 fraying	18 not fixed	26 lubrication
03 leaky	11 scratched	19 clemp	27 readability
04 no function	12 bendet	20 sawing	28 missing components
05 low lifetime	13 noises	21 contamitated	29 hydraulical
06 worn out	14 vibration	22 bad contact	30 electrical
07 dirt	15 miscellaneous	23 temperature	31 reinspection required

4614 cover for rotating wave ☐☐☐☐☐

4616 cover for chains ☐☐☐☐☐

4617 cover for shift cylinder ☐☐☐☐☐

4618 cover for moving parts ☐☐☐☐☐

4619 cover for the exhaust pipe ☐☐☐☐☐

4700 electrical system

4701 function of actuator component ☐☐☐☐☐

4702 emergency stop function ☐☐☐☐☐

4703 ground connections ☐☐☐☐☐

4704 cables and wiring harness ☐☐☐☐☐

4705 temperature switch ☐☐☐☐☐

4800 outtrigger - system

4801 transportation lock ☐☐☐☐☐

4802 locking device ☐☐☐☐☐

4803 backing plate ☐☐☐☐☐

4804 jack cylinder connections ☐☐☐☐☐

4805 pressure adjustment of jack cylinder ☐☐☐☐☐

4900 miscellaneous

4901 additional assembled part from operator ☐☐☐☐☐

4902 changes through operator ☐☐☐☐☐

Competent inspector:

Date: .....

Name: .....

Signature: .....
(stamp)

Customer:

Signature: .....
(stamp)

This test report is filed into the test book

Inspection report for concrete booms

Inspection report –Nr:	Machine-Nr	Hours of operation:	
		Concrete output m³:	
Company:	Post code:	City:	
Boom Type:	Boom Nr.	NL	WV

Proof – Result of the Tests

without defects	defects	reinspection required	**shut down**
☐	☐	☐	☐

Reinspection until date:.....

Error code:

00 no objections	08 corrosion	16 porous	24 deformation
01 cracks	09 lacquer failures	17 burned through	25 bear movement
02 broken	10 fraying	18 not fixed	26 lubrication
03 leaky	11 scratched	19 clemp	27 readability
04 no function	12 bendet	20 sawing	28 missing components
05 low lifetime	13 noises	21 contaminated	29 hydraulical
06 worn out	14 vibration	22 bad contact	30 electrical
07 dirt	15 miscellaneous	23 temperature	31 reinspection required

100 documents

101 instruction manual ☐☐☐☐☐

102 spare parts list ☐☐☐☐☐

200 sub frame

201 frame connection cpl. ☐☐☐☐☐

300 outrigger front R+L

301 transportation safety device ☐☐☐☐☐

302 outrigger ☐☐☐☐☐

303 extension box ☐☐☐☐☐

304 locking device ☐☐☐☐☐

305 slewing bearing ☐☐☐☐☐

306 turn locking device ☐☐☐☐☐

307 support safeguard ☐☐☐☐☐

308 support plate ☐☐☐☐☐

309 fixing of jack cylinder ☐☐☐☐☐

310 jack cylinder ☐☐☐☐☐

311 swing cylinder ☐☐☐☐☐

312 telescopic-cylinder ☐☐☐☐☐

313 pressure adjustment ☐☐☐☐☐

400 outrigger rear L+R

401 transportation safety device ☐☐☐☐☐

402 outrigger ☐☐☐☐☐

403 extension box ☐☐☐☐☐

405 locking device ☐☐☐☐☐

Notes:

Inspection report for concrete booms

Inspection report Nr:	Boom type:	Machine-Nr:

Error code:

00 no objections	08 corrosion	16 porous	24 deformation
01 cracks	09 lacquer failures	17 burned through	25 bear movement
02 broken	10 fraying	18 not fixed	26 lubrication
03 leaky	11 scratched	19 clemp	27 readability
04 no function	12 bendet	20 sawing	28 missing components
05 low lifetime	13 noises	21 contaminated	29 hydraulical
06 worn out	14 vibration	22 bad contact	30 electrical
07 dirt	15 miscellaneous	23 temperature	31 reinspection required

406 slewing bearing ☐☐☐☐☐

407 turn locking device ☐☐☐☐☐

408 support safeguard ☐☐☐☐☐

409 support plate ☐☐☐☐☐

410 fixing of jack cylinder ☐☐☐☐☐

411 jack cylinder ☐☐☐☐☐

412 swing cylinder ☐☐☐☐☐

413 telescopic cylinder ☐☐☐☐☐

500 pedestal

501 pedestal mounting ☐☐☐☐☐

502 sub frame ☐☐☐☐☐

503 truck frame ☐☐☐☐☐

504 pedestal (structure) ☐☐☐☐☐

505 boom valve without leaking ☐☐☐☐☐

506 boom rest ☐☐☐☐☐

507 transportation safety device ☐☐☐☐☐

508 hydraulic line ☐☐☐☐☐

600 slewing head with ball pivot

601 slewing head ☐☐☐☐☐

602 ball pivot ring ☐☐☐☐☐

603 mounting ball pivot ring ☐☐☐☐☐

604 drive pinion ☐☐☐☐☐

605 slewing drive mounting ☐☐☐☐☐

606 slewing stop device ☐☐☐☐☐

607 slewing drive (tooth backlash) ☐☐☐☐☐

608 slewing drive ☐☐☐☐☐

609 brake function ☐☐☐☐☐

610 speed ☐☐☐☐☐

611 pressure setting ☐☐☐☐☐

612 hydraulic lines ☐☐☐☐☐

700 slewing head with slewing column

701 slewing head ☐☐☐☐☐

702 slewing column bearing ☐☐☐☐☐

703 slewing drive (tooth backlash) ☐☐☐☐☐

704 speed ☐☐☐☐☐

705 pressure settings ☐☐☐☐☐

706 hydraulic lines ☐☐☐☐☐

707 swivel cylinder ☐☐☐☐☐

Notes:

Inspection report for concrete booms

Inspection report Nr:	Boom type:	Machine-Nr:

Error code:

00 no objections	08 corrosion	16 porous	24 deformation
01 cracks	09 lacquer failures	17 burned through	25 bear movement
02 broken	10 fraying	18 not fixed	26 lubrication
03 leaky	11 scratched	19 clemp	27 readability
04 no function	12 bendet	20 sawing	28 missing components
05 low lifetime	13 noises	21 contamitated	29 hydraulical
06 worn out	14 vibration	22 bad contact	30 electrical
07 dirt	15 miscellaneous	23 temperature	31 reinspection required

800 boom					
801 „Arm1“	☐	☐	☐	☐	☐
802 bracket conveying line	☐	☐	☐	☐	☐
803 Drop hook	☐	☐	☐	☐	☐
804 „Arm 2“	☐	☐	☐	☐	☐
805 bracket conveying line	☐	☐	☐	☐	☐
806 Drop hook	☐	☐	☐	☐	☐
807 „Arm 3“	☐	☐	☐	☐	☐
808 bracket conveying line	☐	☐	☐	☐	☐
809 guidance and interlock of the arm	☐	☐	☐	☐	☐
810 „Arm 4“	☐	☐	☐	☐	☐
811 bracket conveying line	☐	☐	☐	☐	☐
812 guidance and interlock of the arm	☐	☐	☐	☐	☐
813 „Arm 5“	☐	☐	☐	☐	☐
814 bracket conveying line	☐	☐	☐	☐	☐
815 guidance and interlock of the arm	☐	☐	☐	☐	☐
900 joint „A“	☐	☐	☐	☐	☐
901 boom	☐	☐	☐	☐	☐
902 link lever	☐	☐	☐	☐	☐
903 forcing rod	☐	☐	☐	☐	☐
904 pin	☐	☐	☐	☐	☐
905 cylinder	☐	☐	☐	☐	☐
906 boom speed	☐	☐	☐	☐	☐
907 pressure settings	☐	☐	☐	☐	☐
908 hydraulic lines	☐	☐	☐	☐	☐
909 load holding valve (piston side)	☐	☐	☐	☐	☐
910 load holding valve (rod side)	☐	☐	☐	☐	☐
1000 joint „B“					
1001 boom	☐	☐	☐	☐	☐
1002 link lever	☐	☐	☐	☐	☐
1003 forcing rod	☐	☐	☐	☐	☐
1004 pin	☐	☐	☐	☐	☐
1005 cylinder	☐	☐	☐	☐	☐
1006 boom speed	☐	☐	☐	☐	☐
1007 pressure settings	☐	☐	☐	☐	☐
1008 hydraulic lines	☐	☐	☐	☐	☐
1009 load holding valve (piston side)	☐	☐	☐	☐	☐
1010 load holding valve (rod side)	☐	☐	☐	☐	☐

Notes:

Inspection report for concrete booms

Inspection report Nr:	Boom type:	Machine-Nr:

Error code:

00 no objections	08 corrosion	16 porous	24 deformation
01 cracks	09 lacquer failures	17 burned through	25 bear movement
02 broken	10 fraying	18 not fixed	26 lubrication
03 leaky	11 scratched	19 clemp	27 readability
04 no function	12 bendet	20 sawing	28 missing components
05 low lifetime	13 noises	21 contaminated	29 hydraulical
06 worn out	14 vibration	22 bad contact	30 electrical
07 dirt	15 miscellaneous	23 temperature	31 reinspection required

1100 joint "C"					
1101 boom	☐	☐	☐	☐	☐
1102 link lever	☐	☐	☐	☐	☐
1103 forcing rod	☐	☐	☐	☐	☐
1104 pin	☐	☐	☐	☐	☐
1105 cylinder	☐	☐	☐	☐	☐
1106 boom speed	☐	☐	☐	☐	☐
1107 pressure settings	☐	☐	☐	☐	☐
1108 hydraulic lines	☐	☐	☐	☐	☐
1109 load holding valve (piston side)	☐	☐	☐	☐	☐
1110 load hokding valve (rod side)	☐	☐	☐	☐	☐
1200 joint "D"					
1201 boom	☐	☐	☐	☐	☐
1202 link lever	☐	☐	☐	☐	☐
1203 forcing rod	☐	☐	☐	☐	☐
1204 pin	☐	☐	☐	☐	☐
1205 cylinder	☐	☐	☐	☐	☐
1206 boom speed	☐	☐	☐	☐	☐
1207 pressure settings	☐	☐	☐	☐	☐
1208 hydraulic lines	☐	☐	☐	☐	☐
1209 load holding valve (piston side)	☐	☐	☐	☐	☐
1210 load holding valve (rod side)	☐	☐	☐	☐	☐

1300 joint „E"					
1301 boom	☐	☐	☐	☐	☐
1302 link lever	☐	☐	☐	☐	☐
1303 forcing rod	☐	☐	☐	☐	☐
1304 pin	☐	☐	☐	☐	☐
1305 cylinder	☐	☐	☐	☐	☐
1306 boom speed	☐	☐	☐	☐	☐
1307 pressure settings	☐	☐	☐	☐	☐
1308 hydraulic lines	☐	☐	☐	☐	☐
1309 load holding valve (piston side)	☐	☐	☐	☐	☐
1310 load holding valve (rod side)	☐	☐	☐	☐	☐
1400 concrete delivery line					
1401 assembly of delivery line DN	☐	☐	☐	☐	☐
1402 end hose DN+lenght	☐	☐	☐	☐	☐
1403 delivery line DN	☐	☐	☐	☐	☐
1404 rotating joints of - delivery line	☐	☐	☐	☐	☐
1405 locking pin of the coupling	☐	☐	☐	☐	☐

Notes:

Inspection report for concrete booms

Inspection report Nr:	Boom type:	Machine-Nr:

Error code:

00 no objections	08 corrosion	16 porous	24 deformation
01 cracks	09 lacquer failures	17 burned through	25 bear movement
02 broken	10 fraying	18 not fixed	26 lubrication
03 leaky	11 scratched	19 clemp	27 readability
04 no function	12 bendet	20 sawing	28 missing components
05 low lifetime	13 noises	21 contamitated	29 hydraulical
06 worn out	14 vibration	22 bad contact	30 electrical
07 dirt	15 miscellaneous	23 temperature	31 reinspection required

1406 end hose safety device	☐	☐	☐	☐	☐
1407 reducer	☐	☐	☐	☐	☐
1408 gate elbow, elbow 6"	☐	☐	☐	☐	☐
1500 hydraulic system and hydraulic valves					
1501 Pressure relief valve	☐	☐	☐	☐	☐
1502 pressure settings	☐	☐	☐	☐	☐
1503 hydraulic lines	☐	☐	☐	☐	☐
1504 hand oprerating-(function)	☐	☐	☐	☐	☐
1505 boom control valve	☐	☐	☐	☐	☐
1506 hydraulic pump	☐	☐	☐	☐	☐
1600 electric equipment					
1601 remote control (functions)	☐	☐	☐	☐	☐
1602 emergency stop (function)	☐	☐	☐	☐	☐
1603 switch for outrigger function	☐	☐	☐	☐	☐
1604 switch for boom function	☐	☐	☐	☐	☐
1605 wiring harness	☐	☐	☐	☐	☐
1606 central lubrication	☐	☐	☐	☐	☐

1700 sticker sets					
1701 safety hints	☐	☐	☐	☐	☐
1702 description	☐	☐	☐	☐	☐
1703 operating	☐	☐	☐	☐	☐
1704 short operating instruction	☐	☐	☐	☐	☐
1705 sticker „ don´t use the boom as crane"	☐	☐	☐	☐	☐
1706 sticker „guideline operating with boom- and concrete pump"	☐	☐	☐	☐	☐
1707 name plate	☐	☐	☐	☐	☐
1708 sticker „danger high voltage"	☐	☐	☐	☐	☐

Competent inspector:

Date: _____

Name: _____

Signature: _____
(stamp)

Customer:

Signature: _____
(stamp)

Inspection report for concrete pump

Inspection report Nr:	Machine-Nr:	Hours of operation:
		Concrete output m³:
Company:	Post code:	City:

NL | WV

Proof – Result of the tests

without defects	defects	reinspection required	**shut down**
☐	☐	☐	☐

Reinspection until date:.....

Error code:

00 no objections	08 corrosion	16 porous	24 deformation
01 cracks	09 lacquer failures	17 burned through	25 bear movement
02 broken	10 fraying	18 not fixed	26 lubrication
03 leaky	11 scratched	19 clemp	27 readability
04 no fuction	12 bendet	20 sawing	28 missing components
05 low livetime	13 noises	21 contaminated	29 hydraulical
06 worn out	14 vibration	22 bad contact	30 electrical
07 dirt	15 miscellaneous	23 temperature	31 reinspection required

2000 documents					
2001 operating manual	☐	☐	☐	☐	☐
2002 spare parts list	☐	☐	☐	☐	☐
2100 drive assembly					
2101 coupling and flange	☐	☐	☐	☐	☐
2200 gear box	☐	☐	☐	☐	☐
2300 hydraulic pump (main)	☐	☐	☐	☐	☐
2400 oil-tank	☐	☐	☐	☐	☐
2500 drive shaft	☐	☐	☐	☐	☐

2700 hydraulic control system					
2701 pressure relief valve	☐	☐	☐	☐	☐
2702 pressure setting	☐	☐	☐	☐	☐
2703 hydraulic line	☐	☐	☐	☐	☐
2704 mechanical operation by hand	☐	☐	☐	☐	☐
2800 oil –cooler	☐	☐	☐	☐	☐
2900 accumulator	☐	☐	☐	☐	☐
2901 proofs of the required tests according to accumulator regulation	☐	☐	☐	☐	☐
2902 pressure gauge	☐	☐	☐	☐	☐

Notes:

Inspection report for concrete pump

Inspection report Nr:

Machine-Nr:

Error code:

00 no objections	08 corrosion	16 porous	24 deformation
01 cracks	09 lacquer failures	17 burned through	25 bear movement
02 broken	10 fraying	18 not fixed	26 lubrication
03 leaky	11 scratched	19 clemp	27 readability
04 no function	12 bendet	20 sawing	28 missing components
05 low lifetime	13 noises	21 contamitated	29 hydraulical
06 worn out	14 vibration	22 bad contact	30 electrical
07 dirt	15 miscellaneous	23 temperature	31 reinspection required

3000 central lubrication	
3100 hydraulic motor	
3200 hydraulic lines	
3300 air compressor	
3400 control panel	
3500 concrete pump	
3700 S-valve	
3800 hopper	
4100 sub frame	
4200 water tank	
4300 axle	
4400 water pump	
4500 vibrator	

4600 safety guards, equipment	
4601 stair	
4602 safety for stair	
4603 handrail	
4604 hopper grid (fixing device)	
4606 distance of grid rods	
4607 distance from grid to agitator	
4609 agitator have to stop if grid is open	
4610 accumulator have to dump if grid is open	
4612 cleaning flap hopper	
4613 safety grid into water box	

Notes:

Inspection report for concrete pump

Inspection report Nr: | Machine-Nr:

Error code:

00 no objections	08 corrosion	16 porous	24 deformation
01 cracks	09 lacquer failures	17 burned through	25 bear movement
02 broken	10 fraying	18 not fixed	26 lubrication
03 leaky	11 scratched	19 clemp	27 readability
04 no function	12 bendet	20 sawing	28 missing components
05 low lifetime	13 noises	21 contamitated	29 hydraulical
06 worn out	14 vibration	22 bad contact	30 electrical
07 dirt	15 miscellaneous	23 temperature	31 reinspection required

4614 cover for rotating wave ☐☐☐☐☐

4616 cover for chains ☐☐☐☐☐

4617 cover for shift cylinder ☐☐☐☐☐

4618 cover for moving parts ☐☐☐☐☐

4619 cover for the exhaust pipe ☐☐☐☐☐

4700 electrical system

4701 function of actuator component ☐☐☐☐☐

4702 emergency stop function ☐☐☐☐☐

4703 ground connections ☐☐☐☐☐

4704 cables and wiring harness ☐☐☐☐☐

4705 temperature switch ☐☐☐☐☐

4800 outtrigger - system

4801 transportation lock ☐☐☐☐☐

4802 locking device ☐☐☐☐☐

4803 backing plate ☐☐☐☐☐

4804 jack cylinder connections ☐☐☐☐☐

4805 pressure adjustment of jack cylinder ☐☐☐☐☐

4900 miscellaneous

4901 additional assembled part from operator ☐☐☐☐☐

4902 changes through operator ☐☐☐☐☐

Competent inspector:

Date: .....

Name: .....

Signature: .....
(stamp)

Customer:

Signature: .....
(stamp)

This test report is filed into the test book

Inspection report for concrete booms

Inspection report –Nr:	Machine-Nr	Hours of operation:	
		Concrete output m³:	
Company:	Post code:	City:	
Boom Type:	Boom Nr.	NL	WV

Proof – Result of the Tests

without defects	defects	reinspection required	**shut down**
☐	☐	☐	☐

Reinspection until date:.....

Error code:

00 no objections	08 corrosion	16 porous	24 deformation
01 cracks	09 lacquer failures	17 burned through	25 bear movement
02 broken	10 fraying	18 not fixed	26 lubrication
03 leaky	11 scratched	19 clemp	27 readability
04 no function	12 bendet	20 sawing	28 missing components
05 low lifetime	13 noises	21 contaminated	29 hydraulical
06 worn out	14 vibration	22 bad contact	30 electrical
07 dirt	15 miscellaneous	23 temperature	31 reinspection required

100 documents

101 instruction manual ☐☐☐☐☐

102 spare parts list ☐☐☐☐☐

200 sub frame

201 frame connection cpl. ☐☐☐☐☐

300 outrigger front R+L

301 transportation safety device ☐☐☐☐☐

302 outrigger ☐☐☐☐☐

303 extension box ☐☐☐☐☐

304 locking device ☐☐☐☐☐

305 slewing bearing ☐☐☐☐☐

306 turn locking device ☐☐☐☐☐

307 support safeguard ☐☐☐☐☐

308 support plate ☐☐☐☐☐

309 fixing of jack cylinder ☐☐☐☐☐

310 jack cylinder ☐☐☐☐☐

311 swing cylinder ☐☐☐☐☐

312 telescopic-cylinder ☐☐☐☐☐

313 pressure adjustment ☐☐☐☐☐

400 outrigger rear L+R

401 transportation safety device ☐☐☐☐☐

402 outrigger ☐☐☐☐☐

403 extension box ☐☐☐☐☐

405 locking device ☐☐☐☐☐

Notes:

Inspection report for concrete booms

Inspection report Nr:	Boom type:	Machine-Nr:

Error code:

00 no objections	08 corrosion	16 porous	24 deformation
01 cracks	09 lacquer failures	17 burned through	25 bear movement
02 broken	10 fraying	18 not fixed	26 lubrication
03 leaky	11 scratched	19 clemp	27 readability
04 no function	12 bendet	20 sawing	28 missing components
05 low lifetime	13 noises	21 contaminated	29 hydraulical
06 worn out	14 vibration	22 bad contact	30 electrical
07 dirt	15 miscellaneous	23 temperature	31 reinspection required

406 slewing bearing ☐☐☐☐☐

407 turn locking device ☐☐☐☐☐

408 support safeguard ☐☐☐☐☐

409 support plate ☐☐☐☐☐

410 fixing of jack cylinder ☐☐☐☐☐

411 jack cylinder ☐☐☐☐☐

412 swing cylinder ☐☐☐☐☐

413 telescopic cylinder ☐☐☐☐☐

500 pedestal

501 pedestal mounting ☐☐☐☐☐

502 sub frame ☐☐☐☐☐

503 truck frame ☐☐☐☐☐

504 pedestal (structure) ☐☐☐☐☐

505 boom valve without leaking ☐☐☐☐☐

506 boom rest ☐☐☐☐☐

507 transportation safety device ☐☐☐☐☐

508 hydraulic line ☐☐☐☐☐

600 slewing head with ball pivot

601 slewing head ☐☐☐☐☐

602 ball pivot ring ☐☐☐☐☐

603 mounting ball pivot ring ☐☐☐☐☐

604 drive pinion ☐☐☐☐☐

605 slewing drive mounting ☐☐☐☐☐

606 slewing stop device ☐☐☐☐☐

607 slewing drive (tooth backlash) ☐☐☐☐☐

608 slewing drive ☐☐☐☐☐

609 brake function ☐☐☐☐☐

610 speed ☐☐☐☐☐

611 pressure setting ☐☐☐☐☐

612 hydraulic lines ☐☐☐☐☐

700 slewing head with slewing column

701 slewing head ☐☐☐☐☐

702 slewing column bearing ☐☐☐☐☐

703 slewing drive (tooth backlash) ☐☐☐☐☐

704 speed ☐☐☐☐☐

705 pressure settings ☐☐☐☐☐

706 hydraulic lines ☐☐☐☐☐

707 swivel cylinder ☐☐☐☐☐

Notes:

Inspection report for concrete booms

Inspection report Nr:	Boom type:	Machine-Nr:

Error code:

00 no objections	08 corrosion	16 porous	24 deformation
01 cracks	09 lacquer failures	17 burned through	25 bear movement
02 broken	10 fraying	18 not fixed	26 lubrication
03 leaky	11 scratched	19 clemp	27 readability
04 no function	12 bendet	20 sawing	28 missing components
05 low lifetime	13 noises	21 contamitated	29 hydraulical
06 worn out	14 vibration	22 bad contact	30 electrical
07 dirt	15 miscellaneous	23 temperature	31 reinspection required

800 boom					
801 „Arm1“					
802 bracket conveying line					
803 Drop hook					
804 „Arm 2“					
805 bracket conveying line					
806 Drop hook					
807 „Arm 3“					
808 bracket conveying line					
809 guidance and interlock of the arm					
810 „Arm 4“					
811 bracket conveying line					
812 guidance and interlock of the arm					
813 „Arm 5“					
814 bracket conveying line					
815 guidance and interlock of the arm					
900 joint „A“					
901 boom					
902 link lever					
903 forcing rod					
904 pin					
905 cylinder					

906 boom speed					
907 pressure settings					
908 hydraulic lines					
909 load holding valve (piston side)					
910 load holding valve (rod side)					
1000 joint „B“					
1001 boom					
1002 link lever					
1003 forcing rod					
1004 pin					
1005 cylinder					
1006 boom speed					
1007 pressure settings					
1008 hydraulic lines					
1009 load holding valve (piston side)					
1010 load holding valve (rod side)					

Notes:

Inspection report for concrete booms

Inspection report Nr:	Boom type:	Machine-Nr:

Error code:

00 no objections	08 corrosion	16 porous	24 deformation
01 cracks	09 lacquer failures	17 burned through	25 bear movement
02 broken	10 fraying	18 not fixed	26 lubrication
03 leaky	11 scratched	19 clemp	27 readability
04 no function	12 bendet	20 sawing	28 missing components
05 low lifetime	13 noises	21 contaminated	29 hydraulical
06 worn out	14 vibration	22 bad contact	30 electrical
07 dirt	15 miscellaneous	23 temperature	31 reinspection required

1100 joint "C"					
1101 boom	☐	☐	☐	☐	☐
1102 link lever	☐	☐	☐	☐	☐
1103 forcing rod	☐	☐	☐	☐	☐
1104 pin	☐	☐	☐	☐	☐
1105 cylinder	☐	☐	☐	☐	☐
1106 boom speed	☐	☐	☐	☐	☐
1107 pressure settings	☐	☐	☐	☐	☐
1108 hydraulic lines	☐	☐	☐	☐	☐
1109 load holding valve (piston side)	☐	☐	☐	☐	☐
1110 load hokding valve (rod side)	☐	☐	☐	☐	☐
1200 joint "D"					
1201 boom	☐	☐	☐	☐	☐
1202 link lever	☐	☐	☐	☐	☐
1203 forcing rod	☐	☐	☐	☐	☐
1204 pin	☐	☐	☐	☐	☐
1205 cylinder	☐	☐	☐	☐	☐
1206 boom speed	☐	☐	☐	☐	☐
1207 pressure settings	☐	☐	☐	☐	☐
1208 hydraulic lines	☐	☐	☐	☐	☐
1209 load holding valve (piston side)	☐	☐	☐	☐	☐
1210 load holding valve (rod side)	☐	☐	☐	☐	☐

1300 joint „E"					
1301 boom	☐	☐	☐	☐	☐
1302 link lever	☐	☐	☐	☐	☐
1303 forcing rod	☐	☐	☐	☐	☐
1304 pin	☐	☐	☐	☐	☐
1305 cylinder	☐	☐	☐	☐	☐
1306 boom speed	☐	☐	☐	☐	☐
1307 pressure settings	☐	☐	☐	☐	☐
1308 hydraulic lines	☐	☐	☐	☐	☐
1309 load holding valve (piston side)	☐	☐	☐	☐	☐
1310 load holding valve (rod side)	☐	☐	☐	☐	☐
1400 concrete delivery line					
1401 assembly of delivery line DN	☐	☐	☐	☐	☐
1402 end hose DN+lenght	☐	☐	☐	☐	☐
1403 delivery line DN	☐	☐	☐	☐	☐
1404 rotating joints of - delivery line	☐	☐	☐	☐	☐
1405 locking pin of the coupling	☐	☐	☐	☐	☐

Notes:

Inspection report for concrete booms

Inspection report Nr:	Boom type:	Machine-Nr:

Error code:

00 no objections	08 corrosion	16 porous	24 deformation
01 cracks	09 lacquer failures	17 burned through	25 bear movement
02 broken	10 fraying	18 not fixed	26 lubrication
03 leaky	11 scratched	19 clemp	27 readability
04 no function	12 bendet	20 sawing	28 missing components
05 low lifetime	13 noises	21 contamitated	29 hydraulical
06 worn out	14 vibration	22 bad contact	30 electrical
07 dirt	15 miscellaneous	23 temperature	31 reinspection required

1406 end hose safety device ☐☐☐☐☐

1407 reducer ☐☐☐☐☐

1408 gate elbow, elbow 6" ☐☐☐☐☐

1500 hydraulic system and hydraulic valves

1501 Pressure relief valve ☐☐☐☐☐

1502 pressure settings ☐☐☐☐☐

1503 hydraulic lines ☐☐☐☐☐

1504 hand oprerating-(function) ☐☐☐☐☐

1505 boom control valve ☐☐☐☐☐

1506 hydraulic pump ☐☐☐☐☐

1600 electric equipment

1601 remote control (functions) ☐☐☐☐☐

1602 emergency stop (function) ☐☐☐☐☐

1603 switch for outrigger function ☐☐☐☐☐

1604 switch for boom function ☐☐☐☐☐

1605 wiring harness ☐☐☐☐☐

1606 central lubrication ☐☐☐☐☐

1700 sticker sets

1701 safety hints ☐☐☐☐☐

1702 description ☐☐☐☐☐

1703 operating ☐☐☐☐☐

1704 short operating instruction ☐☐☐☐☐

1705 sticker „ don't use the boom as crane" ☐☐☐☐☐

1706 sticker „guideline operating with boom- and concrete pump" ☐☐☐☐☐

1707 name plate ☐☐☐☐☐

1708 sticker „danger high voltage" ☐☐☐☐☐

Competent inspector:

Date: _____

Name: _____

Signature: _____
(stamp)

Customer:

Signature: _____
(stamp)

Inspection report for concrete pump

Inspection report Nr:	Machine-Nr:	Hours of operation:
		Concrete output m³:
Company:	Post code:	City:

NL | WV

Proof – Result of the tests

without defects	defects	reinspection required	**shut down**
☐	☐	☐	☐

Reinspection until date: .....

Error code:

00 no objections	08 corrosion	16 porous	24 deformation
01 cracks	09 lacquer failures	17 burned through	25 bear movement
02 broken	10 fraying	18 not fixed	26 lubrication
03 leaky	11 scratched	19 clemp	27 readability
04 no fuction	12 bendet	20 sawing	28 missing components
05 low livetime	13 noises	21 contaminated	29 hydraulical
06 worn out	14 vibration	22 bad contact	30 electrical
07 dirt	15 miscellaneous	23 temperature	31 reinspection required

2000 documents					
2001 operating manual	☐	☐	☐	☐	☐
2002 spare parts list	☐	☐	☐	☐	☐
2100 drive assembly					
2101 coupling and flange	☐	☐	☐	☐	☐
2200 gear box	☐	☐	☐	☐	☐
2300 hydraulic pump (main)	☐	☐	☐	☐	☐
2400 oil-tank	☐	☐	☐	☐	☐
2500 drive shaft	☐	☐	☐	☐	☐

2700 hydraulic control system					
2701 pressure relief valve	☐	☐	☐	☐	☐
2702 pressure setting	☐	☐	☐	☐	☐
2703 hydraulic line	☐	☐	☐	☐	☐
2704 mechanical operation by hand	☐	☐	☐	☐	☐
2800 oil –cooler	☐	☐	☐	☐	☐
2900 accumulator	☐	☐	☐	☐	☐
2901 proofs of the required tests according to accumulator regulation	☐	☐	☐	☐	☐
2902 pressure gauge	☐	☐	☐	☐	☐

Notes:

Inspection report for concrete pump

Inspection report Nr:

Machine-Nr:

Error code:

00 no objections	08 corrosion	16 porous	24 deformation
01 cracks	09 lacquer failures	17 burned through	25 bear movement
02 broken	10 fraying	18 not fixed	26 lubrication
03 leaky	11 scratched	19 clemp	27 readability
04 no function	12 bendet	20 sawing	28 missing components
05 low lifetime	13 noises	21 contamitated	29 hydraulical
06 worn out	14 vibration	22 bad contact	30 electrical
07 dirt	15 miscellaneous	23 temperature	31 reinspection required

3000 central lubrication ☐☐☐☐☐	**4600 safety guards, equipment**
3100 hydraulic motor ☐☐☐☐☐	4601 stair ☐☐☐☐☐
3200 hydraulic lines ☐☐☐☐☐	4602 safety for stair ☐☐☐☐☐
3300 air compressor ☐☐☐☐☐	4603 handrail ☐☐☐☐☐
3400 control panel ☐☐☐☐☐	4604 hopper grid (fixing device) ☐☐☐☐☐
3500 concrete pump ☐☐☐☐☐	4606 distance of grid rods ☐☐☐☐☐
3700 S-valve ☐☐☐☐☐	4607 distance from grid to agitator ☐☐☐☐☐
3800 hopper ☐☐☐☐☐	4609 agitator have to stop if grid is open ☐☐☐☐☐
4100 sub frame ☐☐☐☐☐	4610 accumulator have to dump if grid is open ☐☐☐☐☐
4200 water tank ☐☐☐☐☐	4612 cleaning flap hopper ☐☐☐☐☐
4300 axle ☐☐☐☐☐	4613 safety grid into water box ☐☐☐☐☐
4400 water pump ☐☐☐☐☐	
4500 vibrator ☐☐☐☐☐	

Notes:

Inspection report for concrete pump

Inspection report Nr: | Machine-Nr:

Error code:

00 no objections	08 corrosion	16 porous	24 deformation
01 cracks	09 lacquer failures	17 burned through	25 bear movement
02 broken	10 fraying	18 not fixed	26 lubrication
03 leaky	11 scratched	19 clemp	27 readability
04 no function	12 bendet	20 sawing	28 missing components
05 low lifetime	13 noises	21 contamitated	29 hydraulical
06 worn out	14 vibration	22 bad contact	30 electrical
07 dirt	15 miscellaneous	23 temperature	31 reinspection required

4614 cover for rotating wave ☐☐☐☐☐

4616 cover for chains ☐☐☐☐☐

4617 cover for shift cylinder ☐☐☐☐☐

4618 cover for moving parts ☐☐☐☐☐

4619 cover for the exhaust pipe ☐☐☐☐☐

4700 electrical system

4701 function of actuator component ☐☐☐☐☐

4702 emergency stop function ☐☐☐☐☐

4703 ground connections ☐☐☐☐☐

4704 cables and wiring harness ☐☐☐☐☐

4705 temperature switch ☐☐☐☐☐

4800 outtrigger - system

4801 transportation lock ☐☐☐☐☐

4802 locking device ☐☐☐☐☐

4803 backing plate ☐☐☐☐☐

4804 jack cylinder connections ☐☐☐☐☐

4805 pressure adjustment of jack cylinder ☐☐☐☐☐

4900 miscellaneous

4901 additional assembled part from operator ☐☐☐☐☐

4902 changes through operator ☐☐☐☐☐

Competent inspector:

Date: .....

Name: .....

Signature: .....
(stamp)

Customer:

Signature: .....
(stamp)

This test report is filed into the test book

Inspection report for concrete booms

Inspection report –Nr:	Machine-Nr	Hours of operation:	
		Concrete output m³:	
Company:	Post code:	City:	
Boom Type:	Boom Nr.	NL	WV

Proof – Result of the Tests

without defects	defects	reinspection required	**shut down**
☐	☐	☐	☐

Reinspection until date:.....

Error code:

00 no objections	08 corrosion	16 porous	24 deformation
01 cracks	09 lacquer failures	17 burned through	25 bear movement
02 broken	10 fraying	18 not fixed	26 lubrication
03 leaky	11 scratched	19 clemp	27 readability
04 no function	12 bendet	20 sawing	28 missing components
05 low lifetime	13 noises	21 contaminated	29 hydraulical
06 worn out	14 vibration	22 bad contact	30 electrical
07 dirt	15 miscellaneous	23 temperature	31 reinspection required

100 documents

101 instruction manual ☐☐☐☐☐

102 spare parts list ☐☐☐☐☐

200 sub frame

201 frame connection cpl. ☐☐☐☐☐

300 outrigger front R+L

301 transportation safety device ☐☐☐☐☐

302 outrigger ☐☐☐☐☐

303 extension box ☐☐☐☐☐

304 locking device ☐☐☐☐☐

305 slewing bearing ☐☐☐☐☐

306 turn locking device ☐☐☐☐☐

307 support safeguard ☐☐☐☐☐

308 support plate ☐☐☐☐☐

309 fixing of jack cylinder ☐☐☐☐☐

310 jack cylinder ☐☐☐☐☐

311 swing cylinder ☐☐☐☐☐

312 telescopic-cylinder ☐☐☐☐☐

313 pressure adjustment ☐☐☐☐☐

400 outrigger rear L+R

401 transportation safety device ☐☐☐☐☐

402 outrigger ☐☐☐☐☐

403 extension box ☐☐☐☐☐

405 locking device ☐☐☐☐☐

Notes:

Inspection report for concrete booms

Inspection report Nr:	Boom type:	Machine-Nr:

Error code:

00 no objections	08 corrosion	16 porous	24 deformation
01 cracks	09 lacquer failures	17 burned through	25 bear movement
02 broken	10 fraying	18 not fixed	26 lubrication
03 leaky	11 scratched	19 clemp	27 readability
04 no function	12 bendet	20 sawing	28 missing components
05 low lifetime	13 noises	21 contaminated	29 hydraulical
06 worn out	14 vibration	22 bad contact	30 electrical
07 dirt	15 miscellaneous	23 temperature	31 reinspection required

406 slewing bearing ☐☐☐☐☐

407 turn locking device ☐☐☐☐☐

408 support safeguard ☐☐☐☐☐

409 support plate ☐☐☐☐☐

410 fixing of jack cylinder ☐☐☐☐☐

411 jack cylinder ☐☐☐☐☐

412 swing cylinder ☐☐☐☐☐

413 telescopic cylinder ☐☐☐☐☐

500 pedestal

501 pedestal mounting ☐☐☐☐☐

502 sub frame ☐☐☐☐☐

503 truck frame ☐☐☐☐☐

504 pedestal (structure) ☐☐☐☐☐

505 boom valve without leaking ☐☐☐☐☐

506 boom rest ☐☐☐☐☐

507 transportation safety device ☐☐☐☐☐

508 hydraulic line ☐☐☐☐☐

600 slewing head with ball pivot

601 slewing head ☐☐☐☐☐

602 ball pivot ring ☐☐☐☐☐

603 mounting ball pivot ring ☐☐☐☐☐

604 drive pinion ☐☐☐☐☐

605 slewing drive mounting ☐☐☐☐☐

606 slewing stop device ☐☐☐☐☐

607 slewing drive (tooth backlash) ☐☐☐☐☐

608 slewing drive ☐☐☐☐☐

609 brake function ☐☐☐☐☐

610 speed ☐☐☐☐☐

611 pressure setting ☐☐☐☐☐

612 hydraulic lines ☐☐☐☐☐

700 slewing head with slewing column

701 slewing head ☐☐☐☐☐

702 slewing column bearing ☐☐☐☐☐

703 slewing drive (tooth backlash) ☐☐☐☐☐

704 speed ☐☐☐☐☐

705 pressure settings ☐☐☐☐☐

706 hydraulic lines ☐☐☐☐☐

707 swivel cylinder ☐☐☐☐☐

Notes:

Inspection report for concrete booms

Inspection report Nr:	Boom type:	Machine-Nr:

Error code:

00 no objections	08 corrosion	16 porous	24 deformation
01 cracks	09 lacquer failures	17 burned through	25 bear movement
02 broken	10 fraying	18 not fixed	26 lubrication
03 leaky	11 scratched	19 clemp	27 readability
04 no function	12 bendet	20 sawing	28 missing components
05 low lifetime	13 noises	21 contamitated	29 hydraulical
06 worn out	14 vibration	22 bad contact	30 electrical
07 dirt	15 miscellaneous	23 temperature	31 reinspection required

800 boom

801 „Arm1“

802 bracket conveying line

803 Drop hook

804 „Arm 2“

805 bracket conveying line

806 Drop hook

807 „Arm 3“

808 bracket conveying line

809 guidance and interlock of the arm

810 „Arm 4“

811 bracket conveying line

812 guidance and interlock of the arm

813 „Arm 5“

814 bracket conveying line

815 guidance and interlock of the arm

900 joint „A“

901 boom

902 link lever

903 forcing rod

904 pin

905 cylinder

906 boom speed

907 pressure settings

908 hydraulic lines

909 load holding valve (piston side)

910 load holding valve (rod side)

1000 joint „B“

1001 boom

1002 link lever

1003 forcing rod

1004 pin

1005 cylinder

1006 boom speed

1007 pressure settings

1008 hydraulic lines

1009 load holding valve (piston side)

1010 load holding valve (rod side)

Notes:

Inspection report for concrete booms

Inspection report Nr:	Boom type:	Machine-Nr:

Error code:

00 no objections	08 corrosion	16 porous	24 deformation
01 cracks	09 lacquer failures	17 burned through	25 bear movement
02 broken	10 fraying	18 not fixed	26 lubrication
03 leaky	11 scratched	19 clemp	27 readability
04 no function	12 bendet	20 sawing	28 missing components
05 low lifetime	13 noises	21 contaminated	29 hydraulical
06 worn out	14 vibration	22 bad contact	30 electrical
07 dirt	15 miscellaneous	23 temperature	31 reinspection required

1100 joint "C"

1101 boom	☐	☐	☐	☐	☐
1102 link lever	☐	☐	☐	☐	☐
1103 forcing rod	☐	☐	☐	☐	☐
1104 pin	☐	☐	☐	☐	☐
1105 cylinder	☐	☐	☐	☐	☐
1106 boom speed	☐	☐	☐	☐	☐
1107 pressure settings	☐	☐	☐	☐	☐
1108 hydraulic lines	☐	☐	☐	☐	☐
1109 load holding valve (piston side)	☐	☐	☐	☐	☐
1110 load hokding valve (rod side)	☐	☐	☐	☐	☐

1200 joint "D"

1201 boom	☐	☐	☐	☐	☐
1202 link lever	☐	☐	☐	☐	☐
1203 forcing rod	☐	☐	☐	☐	☐
1204 pin	☐	☐	☐	☐	☐
1205 cylinder	☐	☐	☐	☐	☐
1206 boom speed	☐	☐	☐	☐	☐
1207 pressure settings	☐	☐	☐	☐	☐
1208 hydraulic lines	☐	☐	☐	☐	☐
1209 load holding valve (piston side)	☐	☐	☐	☐	☐
1210 load holding valve (rod side)	☐	☐	☐	☐	☐

1300 joint „E"

1301 boom	☐	☐	☐	☐	☐
1302 link lever	☐	☐	☐	☐	☐
1303 forcing rod	☐	☐	☐	☐	☐
1304 pin	☐	☐	☐	☐	☐
1305 cylinder	☐	☐	☐	☐	☐
1306 boom speed	☐	☐	☐	☐	☐
1307 pressure settings	☐	☐	☐	☐	☐
1308 hydraulic lines	☐	☐	☐	☐	☐
1309 load holding valve (piston side)	☐	☐	☐	☐	☐
1310 load holding valve (rod side)	☐	☐	☐	☐	☐

1400 concrete delivery line

1401 assembly of delivery line DN	☐	☐	☐	☐	☐
1402 end hose DN+lenght	☐	☐	☐	☐	☐
1403 delivery line DN	☐	☐	☐	☐	☐
1404 rotating joints of - delivery line	☐	☐	☐	☐	☐
1405 locking pin of the coupling	☐	☐	☐	☐	☐

Notes:

Inspection report for concrete booms

Inspection report Nr:	Boom type:	Machine-Nr:

Error code:

00 no objections	08 corrosion	16 porous	24 deformation
01 cracks	09 lacquer failures	17 burned through	25 bear movement
02 broken	10 fraying	18 not fixed	26 lubrication
03 leaky	11 scratched	19 clemp	27 readability
04 no function	12 bendet	20 sawing	28 missing components
05 low lifetime	13 noises	21 contamitated	29 hydraulical
06 worn out	14 vibration	22 bad contact	30 electrical
07 dirt	15 miscellaneous	23 temperature	31 reinspection required

1406 end hose safety device	☐	☐	☐	☐	☐
1407 reducer	☐	☐	☐	☐	☐
1408 gate elbow, elbow 6"	☐	☐	☐	☐	☐
1500 hydraulic system and hydraulic valves					
1501 Pressure relief valve	☐	☐	☐	☐	☐
1502 pressure settings	☐	☐	☐	☐	☐
1503 hydraulic lines	☐	☐	☐	☐	☐
1504 hand oprerating-(function)	☐	☐	☐	☐	☐
1505 boom control valve	☐	☐	☐	☐	☐
1506 hydraulic pump	☐	☐	☐	☐	☐
1600 electric equipment					
1601 remote control (functions)	☐	☐	☐	☐	☐
1602 emergency stop (function)	☐	☐	☐	☐	☐
1603 switch for outrigger function	☐	☐	☐	☐	☐
1604 switch for boom function	☐	☐	☐	☐	☐
1605 wiring harness	☐	☐	☐	☐	☐
1606 central lubrication	☐	☐	☐	☐	☐

1700 sticker sets					
1701 safety hints	☐	☐	☐	☐	☐
1702 description	☐	☐	☐	☐	☐
1703 operating	☐	☐	☐	☐	☐
1704 short operating instruction	☐	☐	☐	☐	☐
1705 sticker „ don't use the boom as crane"	☐	☐	☐	☐	☐
1706 sticker „guideline operating with boom- and concrete pump"	☐	☐	☐	☐	☐
1707 name plate	☐	☐	☐	☐	☐
1708 sticker „danger high voltage"	☐	☐	☐	☐	☐

Competent inspector:

Date: _____

Name: _____

Signature: _____
(stamp)

Customer:

Signature: _____
(stamp)

Inspection report for concrete pump

Inspection report Nr:	Machine-Nr:	Hours of operation:
		Concrete output m³:
Company:	Post code:	City:

NL | WV

Proof – Result of the tests

without defects	defects	reinspection required	**shut down**
☐	☐	☐	☐

Reinspection until date: .....

Error code:

00 no objections	08 corrosion	16 porous	24 deformation
01 cracks	09 lacquer failures	17 burned through	25 bear movement
02 broken	10 fraying	18 not fixed	26 lubrication
03 leaky	11 scratched	19 clemp	27 readability
04 no fuction	12 bendet	20 sawing	28 missing components
05 low livetime	13 noises	21 contaminated	29 hydraulical
06 worn out	14 vibration	22 bad contact	30 electrical
07 dirt	15 miscellaneous	23 temperature	31 reinspection required

2000 documents					
2001 operating manual	☐	☐	☐	☐	☐
2002 spare parts list	☐	☐	☐	☐	☐
2100 drive assembly					
2101 coupling and flange	☐	☐	☐	☐	☐
2200 gear box	☐	☐	☐	☐	☐
2300 hydraulic pump (main)	☐	☐	☐	☐	☐
2400 oil-tank	☐	☐	☐	☐	☐
2500 drive shaft	☐	☐	☐	☐	☐

2700 hydraulic control system					
2701 pressure relief valve	☐	☐	☐	☐	☐
2702 pressure setting	☐	☐	☐	☐	☐
2703 hydraulic line	☐	☐	☐	☐	☐
2704 mechanical operation by hand	☐	☐	☐	☐	☐
2800 oil –cooler	☐	☐	☐	☐	☐
2900 accumulator	☐	☐	☐	☐	☐
2901 proofs of the required tests according to accumulator regulation	☐	☐	☐	☐	☐
2902 pressure gauge	☐	☐	☐	☐	☐

Notes:

Inspection report for concrete pump

Inspection report Nr:	Machine-Nr:

Error code:

00 no objections	08 corrosion	16 porous	24 deformation
01 cracks	09 lacquer failures	17 burned through	25 bear movement
02 broken	10 fraying	18 not fixed	26 lubrication
03 leaky	11 scratched	19 clemp	27 readability
04 no function	12 bendet	20 sawing	28 missing components
05 low lifetime	13 noises	21 contamitated	29 hydraulical
06 worn out	14 vibration	22 bad contact	30 electrical
07 dirt	15 miscellaneous	23 temperature	31 reinspection required

3000 central lubrication	☐	☐	☐	☐	☐	
3100 hydraulic motor	☐	☐	☐	☐	☐	
3200 hydraulic lines	☐	☐	☐	☐	☐	
3300 air compressor	☐	☐	☐	☐	☐	
3400 control panel	☐	☐	☐	☐	☐	
3500 concrete pump	☐	☐	☐	☐	☐	
3700 S-valve	☐	☐	☐	☐	☐	
3800 hopper	☐	☐	☐	☐	☐	
4100 sub frame	☐	☐	☐	☐	☐	
4200 water tank	☐	☐	☐	☐	☐	
4300 axle	☐	☐	☐	☐	☐	
4400 water pump	☐	☐	☐	☐	☐	
4500 vibrator	☐	☐	☐	☐	☐	

4600 safety guards, equipment					
4601 stair	☐	☐	☐	☐	☐
4602 safety for stair	☐	☐	☐	☐	☐
4603 handrail	☐	☐	☐	☐	☐
4604 hopper grid (fixing device)	☐	☐	☐	☐	☐
4606 distance of grid rods	☐	☐	☐	☐	☐
4607 distance from grid to agitator	☐	☐	☐	☐	☐
4609 agitator have to stop if grid is open	☐	☐	☐	☐	☐
4610 accumulator have to dump if grid is open	☐	☐	☐	☐	☐
4612 cleaning flap hopper	☐	☐	☐	☐	☐
4613 safety grid into water box	☐	☐	☐	☐	☐

Notes:

Inspection report for concrete pump

Inspection report Nr:

Machine-Nr:

Error code:

00 no objections	08 corrosion	16 porous	24 deformation
01 cracks	09 lacquer failures	17 burned through	25 bear movement
02 broken	10 fraying	18 not fixed	26 lubrication
03 leaky	11 scratched	19 clemp	27 readability
04 no function	12 bendet	20 sawing	28 missing components
05 low lifetime	13 noises	21 contamitated	29 hydraulical
06 worn out	14 vibration	22 bad contact	30 electrical
07 dirt	15 miscellaneous	23 temperature	31 reinspection required

4614 cover for rotating wave ☐☐☐☐☐

4616 cover for chains ☐☐☐☐☐

4617 cover for shift cylinder ☐☐☐☐☐

4618 cover for moving parts ☐☐☐☐☐

4619 cover for the exhaust pipe ☐☐☐☐☐

4700 electrical system

4701 function of actuator component ☐☐☐☐☐

4702 emergency stop function ☐☐☐☐☐

4703 ground connections ☐☐☐☐☐

4704 cables and wiring harness ☐☐☐☐☐

4705 temperature switch ☐☐☐☐☐

4800 outtrigger - system

4801 transportation lock ☐☐☐☐☐

4802 locking device ☐☐☐☐☐

4803 backing plate ☐☐☐☐☐

4804 jack cylinder connections ☐☐☐☐☐

4805 pressure adjustment of jack cylinder ☐☐☐☐☐

4900 miscellaneous

4901 additional assembled part from operator ☐☐☐☐☐

4902 changes through operator ☐☐☐☐☐

Competent inspector:

Date: .....

Name: .....

Signature: .....
(stamp)

Customer:

Signature: .....
(stamp)

This test report is filed into the test book

Inspection report for concrete booms

Inspection report –Nr:	Machine-Nr	Hours of operation:	
		Concrete output m³:	
Company:	Post code:	City:	
Boom Type:	Boom Nr.	NL	WV

Proof – Result of the Tests

without defects	defects	reinspection required	**shut down**
☐	☐	☐	☐

Reinspection until date:.....

Error code:

00 no objections	08 corrosion	16 porous	24 deformation
01 cracks	09 lacquer failures	17 burned through	25 bear movement
02 broken	10 fraying	18 not fixed	26 lubrication
03 leaky	11 scratched	19 clemp	27 readability
04 no function	12 bendet	20 sawing	28 missing components
05 low lifetime	13 noises	21 contaminated	29 hydraulical
06 worn out	14 vibration	22 bad contact	30 electrical
07 dirt	15 miscellaneous	23 temperature	31 reinspection required

100 documents

101 instruction manual ☐☐☐☐☐

102 spare parts list ☐☐☐☐☐

200 sub frame

201 frame connection cpl. ☐☐☐☐☐

300 outrigger front R+L

301 transportation safety device ☐☐☐☐☐

302 outrigger ☐☐☐☐☐

303 extension box ☐☐☐☐☐

304 locking device ☐☐☐☐☐

305 slewing bearing ☐☐☐☐☐

306 turn locking device ☐☐☐☐☐

307 support safeguard ☐☐☐☐☐

308 support plate ☐☐☐☐☐

309 fixing of jack cylinder ☐☐☐☐☐

310 jack cylinder ☐☐☐☐☐

311 swing cylinder ☐☐☐☐☐

312 telescopic-cylinder ☐☐☐☐☐

313 pressure adjustment ☐☐☐☐☐

400 outrigger rear L+R

401 transportation safety device ☐☐☐☐☐

402 outrigger ☐☐☐☐☐

403 extension box ☐☐☐☐☐

405 locking device ☐☐☐☐☐

Notes:

Inspection report for concrete booms

Inspection report Nr:	Boom type:	Machine-Nr:

Error code:

00 no objections	08 corrosion	16 porous	24 deformation
01 cracks	09 lacquer failures	17 burned through	25 bear movement
02 broken	10 fraying	18 not fixed	26 lubrication
03 leaky	11 scratched	19 clemp	27 readability
04 no function	12 bendet	20 sawing	28 missing components
05 low lifetime	13 noises	21 contaminated	29 hydraulical
06 worn out	14 vibration	22 bad contact	30 electrical
07 dirt	15 miscellaneous	23 temperature	31 reinspection required

406 slewing bearing ☐☐☐☐☐

407 turn locking device ☐☐☐☐☐

408 support safeguard ☐☐☐☐☐

409 support plate ☐☐☐☐☐

410 fixing of jack cylinder ☐☐☐☐☐

411 jack cylinder ☐☐☐☐☐

412 swing cylinder ☐☐☐☐☐

413 telescopic cylinder ☐☐☐☐☐

500 pedestal

501 pedestal mounting ☐☐☐☐☐

502 sub frame ☐☐☐☐☐

503 truck frame ☐☐☐☐☐

504 pedestal (structure) ☐☐☐☐☐

505 boom valve without leaking ☐☐☐☐☐

506 boom rest ☐☐☐☐☐

507 transportation safety device ☐☐☐☐☐

508 hydraulic line ☐☐☐☐☐

600 slewing head with ball pivot

601 slewing head ☐☐☐☐☐

602 ball pivot ring ☐☐☐☐☐

603 mounting ball pivot ring ☐☐☐☐☐

604 drive pinion ☐☐☐☐☐

605 slewing drive mounting ☐☐☐☐☐

606 slewing stop device ☐☐☐☐☐

607 slewing drive (tooth backlash) ☐☐☐☐☐

608 slewing drive ☐☐☐☐☐

609 brake function ☐☐☐☐☐

610 speed ☐☐☐☐☐

611 pressure setting ☐☐☐☐☐

612 hydraulic lines ☐☐☐☐☐

700 slewing head with slewing column

701 slewing head ☐☐☐☐☐

702 slewing column bearing ☐☐☐☐☐

703 slewing drive (tooth backlash) ☐☐☐☐☐

704 speed ☐☐☐☐☐

705 pressure settings ☐☐☐☐☐

706 hydraulic lines ☐☐☐☐☐

707 swivel cylinder ☐☐☐☐☐

Notes:

Inspection report for concrete booms

Inspection report Nr:	Boom type:	Machine-Nr:

Error code:

00 no objections	08 corrosion	16 porous	24 deformation
01 cracks	09 lacquer failures	17 burned through	25 bear movement
02 broken	10 fraying	18 not fixed	26 lubrication
03 leaky	11 scratched	19 clemp	27 readability
04 no function	12 bendet	20 sawing	28 missing components
05 low lifetime	13 noises	21 contamitated	29 hydraulical
06 worn out	14 vibration	22 bad contact	30 electrical
07 dirt	15 miscellaneous	23 temperature	31 reinspection required

800 boom
801 „Arm1“
802 bracket conveying line
803 Drop hook
804 „Arm 2“
805 bracket conveying line
806 Drop hook
807 „Arm 3“
808 bracket conveying line
809 guidance and interlock of the arm
810 „Arm 4“
811 bracket conveying line
812 guidance and interlock of the arm
813 „Arm 5“
814 bracket conveying line
815 guidance and interlock of the arm

900 joint „A“
901 boom
902 link lever
903 forcing rod
904 pin
905 cylinder
906 boom speed
907 pressure settings
908 hydraulic lines
909 load holding valve (piston side)
910 load holding valve (rod side)

1000 joint „B“
1001 boom
1002 link lever
1003 forcing rod
1004 pin
1005 cylinder
1006 boom speed
1007 pressure settings
1008 hydraulic lines
1009 load holding valve (piston side)
1010 load holding valve (rod side)

Notes:

Inspection report for concrete booms

Inspection report Nr:	Boom type:	Machine-Nr:

Error code:

00 no objections	08 corrosion	16 porous	24 deformation
01 cracks	09 lacquer failures	17 burned through	25 bear movement
02 broken	10 fraying	18 not fixed	26 lubrication
03 leaky	11 scratched	19 clemp	27 readability
04 no function	12 bendet	20 sawing	28 missing components
05 low lifetime	13 noises	21 contaminated	29 hydraulical
06 worn out	14 vibration	22 bad contact	30 electrical
07 dirt	15 miscellaneous	23 temperature	31 reinspection required

1100 joint "C"

1101 boom	☐	☐	☐	☐	☐
1102 link lever	☐	☐	☐	☐	☐
1103 forcing rod	☐	☐	☐	☐	☐
1104 pin	☐	☐	☐	☐	☐
1105 cylinder	☐	☐	☐	☐	☐
1106 boom speed	☐	☐	☐	☐	☐
1107 pressure settings	☐	☐	☐	☐	☐
1108 hydraulic lines	☐	☐	☐	☐	☐
1109 load holding valve (piston side)	☐	☐	☐	☐	☐
1110 load hokding valve (rod side)	☐	☐	☐	☐	☐

1200 joint "D"

1201 boom	☐	☐	☐	☐	☐
1202 link lever	☐	☐	☐	☐	☐
1203 forcing rod	☐	☐	☐	☐	☐
1204 pin	☐	☐	☐	☐	☐
1205 cylinder	☐	☐	☐	☐	☐
1206 boom speed	☐	☐	☐	☐	☐
1207 pressure settings	☐	☐	☐	☐	☐
1208 hydraulic lines	☐	☐	☐	☐	☐
1209 load holding valve (piston side)	☐	☐	☐	☐	☐
1210 load holding valve (rod side)	☐	☐	☐	☐	☐

1300 joint „E"

1301 boom	☐	☐	☐	☐	☐
1302 link lever	☐	☐	☐	☐	☐
1303 forcing rod	☐	☐	☐	☐	☐
1304 pin	☐	☐	☐	☐	☐
1305 cylinder	☐	☐	☐	☐	☐
1306 boom speed	☐	☐	☐	☐	☐
1307 pressure settings	☐	☐	☐	☐	☐
1308 hydraulic lines	☐	☐	☐	☐	☐
1309 load holding valve (piston side)	☐	☐	☐	☐	☐
1310 load holding valve (rod side)	☐	☐	☐	☐	☐

1400 concrete delivery line

1401 assembly of delivery line DN	☐	☐	☐	☐	☐
1402 end hose DN+lenght	☐	☐	☐	☐	☐
1403 delivery line DN	☐	☐	☐	☐	☐
1404 rotating joints of - delivery line	☐	☐	☐	☐	☐
1405 locking pin of the coupling	☐	☐	☐	☐	☐

Notes:

Inspection report for concrete booms

Inspection report Nr:	Boom type:	Machine-Nr:

Error code:

00 no objections	08 corrosion	16 porous	24 deformation
01 cracks	09 lacquer failures	17 burned through	25 bear movement
02 broken	10 fraying	18 not fixed	26 lubrication
03 leaky	11 scratched	19 clemp	27 readability
04 no function	12 bendet	20 sawing	28 missing components
05 low lifetime	13 noises	21 contamitated	29 hydraulical
06 worn out	14 vibration	22 bad contact	30 electrical
07 dirt	15 miscellaneous	23 temperature	31 reinspection required

1406 end hose safety device	☐	☐	☐	☐	☐
1407 reducer	☐	☐	☐	☐	☐
1408 gate elbow, elbow 6"	☐	☐	☐	☐	☐
1500 hydraulic system and hydraulic valves					
1501 Pressure relief valve	☐	☐	☐	☐	☐
1502 pressure settings	☐	☐	☐	☐	☐
1503 hydraulic lines	☐	☐	☐	☐	☐
1504 hand oprerating-(function)	☐	☐	☐	☐	☐
1505 boom control valve	☐	☐	☐	☐	☐
1506 hydraulic pump	☐	☐	☐	☐	☐
1600 electric equipment					
1601 remote control (functions)	☐	☐	☐	☐	☐
1602 emergency stop (function)	☐	☐	☐	☐	☐
1603 switch for outrigger function	☐	☐	☐	☐	☐
1604 switch for boom function	☐	☐	☐	☐	☐
1605 wiring harness	☐	☐	☐	☐	☐
1606 central lubrication	☐	☐	☐	☐	☐

1700 sticker sets					
1701 safety hints	☐	☐	☐	☐	☐
1702 description	☐	☐	☐	☐	☐
1703 operating	☐	☐	☐	☐	☐
1704 short operating instruction	☐	☐	☐	☐	☐
1705 sticker „ don´t use the boom as crane"	☐	☐	☐	☐	☐
1706 sticker „guideline operating with boom- and concrete pump"	☐	☐	☐	☐	☐
1707 name plate	☐	☐	☐	☐	☐
1708 sticker „danger high voltage"	☐	☐	☐	☐	☐

Competent inspector:

Date: _____

Name: _____

Signature: _____
(stamp)

Customer:

Signature: _____
(stamp)

Inspection report for concrete pump

Inspection report Nr:	Machine-Nr:	Hours of operation:
		Concrete output m³:
Company:	Post code:	City:

NL WV

Proof – Result of the tests

without defects	defects	reinspection required	**shut down**
☐	☐	☐	☐

Reinspection until date:.....

Error code:

00 no objections	08 corrosion	16 porous	24 deformation
01 cracks	09 lacquer failures	17 burned through	25 bear movement
02 broken	10 fraying	18 not fixed	26 lubrication
03 leaky	11 scratched	19 clemp	27 readability
04 no fuction	12 bendet	20 sawing	28 missing components
05 low livetime	13 noises	21 contaminated	29 hydraulical
06 worn out	14 vibration	22 bad contact	30 electrical
07 dirt	15 miscellaneous	23 temperature	31 reinspection required

2000 documents

2001 operating manual ☐☐☐☐☐

2002 spare parts list ☐☐☐☐☐

2100 drive assembly

2101 coupling and flange ☐☐☐☐☐

2200 gear box ☐☐☐☐☐

2300 hydraulic pump (main) ☐☐☐☐☐

2400 oil-tank ☐☐☐☐☐

2500 drive shaft ☐☐☐☐☐

2700 hydraulic control system

2701 pressure relief valve ☐☐☐☐☐

2702 pressure setting ☐☐☐☐☐

2703 hydraulic line ☐☐☐☐☐

2704 mechanical operation by hand ☐☐☐☐☐

2800 oil –cooler ☐☐☐☐☐

2900 accumulator ☐☐☐☐☐

2901 proofs of the required tests according to accumulator regulation ☐☐☐☐☐

2902 pressure gauge ☐☐☐☐☐

Notes:

Inspection report for concrete pump

Inspection report Nr:	Machine-Nr:

Error code:

00 no objections	08 corrosion	16 porous	24 deformation
01 cracks	09 lacquer failures	17 burned through	25 bear movement
02 broken	10 fraying	18 not fixed	26 lubrication
03 leaky	11 scratched	19 clemp	27 readability
04 no function	12 bendet	20 sawing	28 missing components
05 low lifetime	13 noises	21 contamitated	29 hydraulical
06 worn out	14 vibration	22 bad contact	30 electrical
07 dirt	15 miscellaneous	23 temperature	31 reinspection required

3000 central lubrication	☐	☐	☐	☐	☐	**4600 safety guards, equipment**					
3100 hydraulic motor	☐	☐	☐	☐	☐	4601 stair	☐	☐	☐	☐	☐
3200 hydraulic lines	☐	☐	☐	☐	☐	4602 safety for stair	☐	☐	☐	☐	☐
3300 air compressor	☐	☐	☐	☐	☐	4603 handrail	☐	☐	☐	☐	☐
3400 control panel	☐	☐	☐	☐	☐	4604 hopper grid (fixing device)	☐	☐	☐	☐	☐
3500 concrete pump	☐	☐	☐	☐	☐	4606 distance of grid rods	☐	☐	☐	☐	☐
3700 S-valve	☐	☐	☐	☐	☐	4607 distance from grid to agitator	☐	☐	☐	☐	☐
3800 hopper	☐	☐	☐	☐	☐	4609 agitator have to stop if grid is open	☐	☐	☐	☐	☐
4100 sub frame	☐	☐	☐	☐	☐	4610 accumulator have to dump if grid is open	☐	☐	☐	☐	☐
4200 water tank	☐	☐	☐	☐	☐	4612 cleaning flap hopper	☐	☐	☐	☐	☐
4300 axle	☐	☐	☐	☐	☐	4613 safety grid into water box	☐	☐	☐	☐	☐
4400 water pump	☐	☐	☐	☐	☐						
4500 vibrator	☐	☐	☐	☐	☐						

Notes:

Inspection report for concrete pump

Inspection report Nr:

Machine-Nr:

Error code:

00 no objections	08 corrosion	16 porous	24 deformation
01 cracks	09 lacquer failures	17 burned through	25 bear movement
02 broken	10 fraying	18 not fixed	26 lubrication
03 leaky	11 scratched	19 clemp	27 readability
04 no function	12 bendet	20 sawing	28 missing components
05 low lifetime	13 noises	21 contamitated	29 hydraulical
06 worn out	14 vibration	22 bad contact	30 electrical
07 dirt	15 miscellaneous	23 temperature	31 reinspection required

4614 cover for rotating wave	☐	☐	☐	☐	☐
4616 cover for chains	☐	☐	☐	☐	☐
4617 cover for shift cylinder	☐	☐	☐	☐	☐
4618 cover for moving parts	☐	☐	☐	☐	☐
4619 cover for the exhaust pipe	☐	☐	☐	☐	☐
4700 electrical system					
4701 function of actuator component	☐	☐	☐	☐	☐
4702 emergency stop function	☐	☐	☐	☐	☐
4703 ground connections	☐	☐	☐	☐	☐
4704 cables and wiring harness	☐	☐	☐	☐	☐
4705 temperature switch	☐	☐	☐	☐	☐
4800 outtrigger - system					
4801 transportation lock	☐	☐	☐	☐	☐
4802 locking device	☐	☐	☐	☐	☐
4803 backing plate	☐	☐	☐	☐	☐
4804 jack cylinder connections	☐	☐	☐	☐	☐
4805 pressure adjustment of jack cylinder	☐	☐	☐	☐	☐
4900 miscellaneous					
4901 additional assembled part from operator	☐	☐	☐	☐	☐
4902 changes through operator	☐	☐	☐	☐	☐

Competent inspector:

Date: .....

Name: .....

Signature: .....
(stamp)

Customer:

Signature: .....
(stamp)

This test report is filed into the test book

Inspection report for concrete booms

Inspection report –Nr:	Machine-Nr	Hours of operation:	
		Concrete output m³:	
Company:	Post code:	City:	
Boom Type:	Boom Nr.	NL	WV

Proof – Result of the Tests

without defects	defects	reinspection required	**shut down**
☐	☐	☐	☐

Reinspection until date:.....

Error code:

00 no objections	08 corrosion	16 porous	24 deformation
01 cracks	09 lacquer failures	17 burned through	25 bear movement
02 broken	10 fraying	18 not fixed	26 lubrication
03 leaky	11 scratched	19 clemp	27 readability
04 no function	12 bendet	20 sawing	28 missing components
05 low lifetime	13 noises	21 contaminated	29 hydraulical
06 worn out	14 vibration	22 bad contact	30 electrical
07 dirt	15 miscellaneous	23 temperature	31 reinspection required

100 documents

101 instruction manual ☐☐☐☐☐

102 spare parts list ☐☐☐☐☐

200 sub frame

201 frame connection cpl. ☐☐☐☐☐

300 outrigger front R+L

301 transportation safety device ☐☐☐☐☐

302 outrigger ☐☐☐☐☐

303 extension box ☐☐☐☐☐

304 locking device ☐☐☐☐☐

305 slewing bearing ☐☐☐☐☐

306 turn locking device ☐☐☐☐☐

307 support safeguard ☐☐☐☐☐

308 support plate ☐☐☐☐☐

309 fixing of jack cylinder ☐☐☐☐☐

310 jack cylinder ☐☐☐☐☐

311 swing cylinder ☐☐☐☐☐

312 telescopic-cylinder ☐☐☐☐☐

313 pressure adjustment ☐☐☐☐☐

400 outrigger rear L+R

401 transportation safety device ☐☐☐☐☐

402 outrigger ☐☐☐☐☐

403 extension box ☐☐☐☐☐

405 locking device ☐☐☐☐☐

Notes:

Inspection report for concrete booms

Inspection report Nr:	Boom type:	Machine-Nr:

Error code:

00 no objections	08 corrosion	16 porous	24 deformation
01 cracks	09 lacquer failures	17 burned through	25 bear movement
02 broken	10 fraying	18 not fixed	26 lubrication
03 leaky	11 scratched	19 clemp	27 readability
04 no function	12 bendet	20 sawing	28 missing components
05 low lifetime	13 noises	21 contaminated	29 hydraulical
06 worn out	14 vibration	22 bad contact	30 electrical
07 dirt	15 miscellaneous	23 temperature	31 reinspection required

406 slewing bearing ☐☐☐☐☐

407 turn locking device ☐☐☐☐☐

408 support safeguard ☐☐☐☐☐

409 support plate ☐☐☐☐☐

410 fixing of jack cylinder ☐☐☐☐☐

411 jack cylinder ☐☐☐☐☐

412 swing cylinder ☐☐☐☐☐

413 telescopic cylinder ☐☐☐☐☐

500 pedestal

501 pedestal mounting ☐☐☐☐☐

502 sub frame ☐☐☐☐☐

503 truck frame ☐☐☐☐☐

504 pedestal (structure) ☐☐☐☐☐

505 boom valve without leaking ☐☐☐☐☐

506 boom rest ☐☐☐☐☐

507 transportation safety device ☐☐☐☐☐

508 hydraulic line ☐☐☐☐☐

600 slewing head with ball pivot

601 slewing head ☐☐☐☐☐

602 ball pivot ring ☐☐☐☐☐

603 mounting ball pivot ring ☐☐☐☐☐

604 drive pinion ☐☐☐☐☐

605 slewing drive mounting ☐☐☐☐☐

606 slewing stop device ☐☐☐☐☐

607 slewing drive (tooth backlash) ☐☐☐☐☐

608 slewing drive ☐☐☐☐☐

609 brake function ☐☐☐☐☐

610 speed ☐☐☐☐☐

611 pressure setting ☐☐☐☐☐

612 hydraulic lines ☐☐☐☐☐

700 slewing head with slewing column

701 slewing head ☐☐☐☐☐

702 slewing column bearing ☐☐☐☐☐

703 slewing drive (tooth backlash) ☐☐☐☐☐

704 speed ☐☐☐☐☐

705 pressure settings ☐☐☐☐☐

706 hydraulic lines ☐☐☐☐☐

707 swivel cylinder ☐☐☐☐☐

Notes:

Inspection report for concrete booms

Inspection report Nr:	Boom type:	Machine-Nr:

Error code:

00 no objections	08 corrosion	16 porous	24 deformation
01 cracks	09 lacquer failures	17 burned through	25 bear movement
02 broken	10 fraying	18 not fixed	26 lubrication
03 leaky	11 scratched	19 clemp	27 readability
04 no function	12 bendet	20 sawing	28 missing components
05 low lifetime	13 noises	21 contamitated	29 hydraulical
06 worn out	14 vibration	22 bad contact	30 electrical
07 dirt	15 miscellaneous	23 temperature	31 reinspection required

800 boom						906 boom speed					
801 „Arm1“						907 pressure settings					
802 bracket conveying line						908 hydraulic lines					
803 Drop hook						909 load holding valve (piston side)					
804 „Arm 2“						910 load holding valve (rod side)					
805 bracket conveying line						**1000 joint „B“**					
806 Drop hook						1001 boom					
807 „Arm 3“						1002 link lever					
808 bracket conveying line						1003 forcing rod					
809 guidance and interlock of the arm						1004 pin					
810 „Arm 4“						1005 cylinder					
811 bracket conveying line						1006 boom speed					
812 guidance and interlock of the arm						1007 pressure settings					
813 „Arm 5“						1008 hydraulic lines					
814 bracket conveying line						1009 load holding valve (piston side)					
815 guidance and interlock of the arm						1010 load holding valve (rod side)					
900 joint „A“											
901 boom						Notes:					
902 link lever											
903 forcing rod											
904 pin											
905 cylinder											

Inspection report for concrete booms

Inspection report Nr:	Boom type:	Machine-Nr:

Error code:

00 no objections	08 corrosion	16 porous	24 deformation
01 cracks	09 lacquer failures	17 burned through	25 bear movement
02 broken	10 fraying	18 not fixed	26 lubrication
03 leaky	11 scratched	19 clemp	27 readability
04 no function	12 bendet	20 sawing	28 missing components
05 low lifetime	13 noises	21 contaminated	29 hydraulical
06 worn out	14 vibration	22 bad contact	30 electrical
07 dirt	15 miscellaneous	23 temperature	31 reinspection required

1100 joint "C"

1101 boom	☐	☐	☐	☐	☐
1102 link lever	☐	☐	☐	☐	☐
1103 forcing rod	☐	☐	☐	☐	☐
1104 pin	☐	☐	☐	☐	☐
1105 cylinder	☐	☐	☐	☐	☐
1106 boom speed	☐	☐	☐	☐	☐
1107 pressure settings	☐	☐	☐	☐	☐
1108 hydraulic lines	☐	☐	☐	☐	☐
1109 load holding valve (piston side)	☐	☐	☐	☐	☐
1110 load hokding valve (rod side)	☐	☐	☐	☐	☐

1200 joint "D"

1201 boom	☐	☐	☐	☐	☐
1202 link lever	☐	☐	☐	☐	☐
1203 forcing rod	☐	☐	☐	☐	☐
1204 pin	☐	☐	☐	☐	☐
1205 cylinder	☐	☐	☐	☐	☐
1206 boom speed	☐	☐	☐	☐	☐
1207 pressure settings	☐	☐	☐	☐	☐
1208 hydraulic lines	☐	☐	☐	☐	☐
1209 load holding valve (piston side)	☐	☐	☐	☐	☐
1210 load holding valve (rod side)	☐	☐	☐	☐	☐

1300 joint „E"

1301 boom	☐	☐	☐	☐	☐
1302 link lever	☐	☐	☐	☐	☐
1303 forcing rod	☐	☐	☐	☐	☐
1304 pin	☐	☐	☐	☐	☐
1305 cylinder	☐	☐	☐	☐	☐
1306 boom speed	☐	☐	☐	☐	☐
1307 pressure settings	☐	☐	☐	☐	☐
1308 hydraulic lines	☐	☐	☐	☐	☐
1309 load holding valve (piston side)	☐	☐	☐	☐	☐
1310 load holding valve (rod side)	☐	☐	☐	☐	☐

1400 concrete delivery line

1401 assembly of delivery line DN	☐	☐	☐	☐	☐
1402 end hose DN+lenght	☐	☐	☐	☐	☐
1403 delivery line DN	☐	☐	☐	☐	☐
1404 rotating joints of - delivery line	☐	☐	☐	☐	☐
1405 locking pin of the coupling	☐	☐	☐	☐	☐

Notes:

Inspection report for concrete booms

Inspection report Nr:	Boom type:	Machine-Nr:

Error code:

00 no objections	08 corrosion	16 porous	24 deformation
01 cracks	09 lacquer failures	17 burned through	25 bear movement
02 broken	10 fraying	18 not fixed	26 lubrication
03 leaky	11 scratched	19 clemp	27 readability
04 no function	12 bendet	20 sawing	28 missing components
05 low lifetime	13 noises	21 contamitated	29 hydraulical
06 worn out	14 vibration	22 bad contact	30 electrical
07 dirt	15 miscellaneous	23 temperature	31 reinspection required

1406 end hose safety device ☐☐☐☐☐

1407 reducer ☐☐☐☐☐

1408 gate elbow, elbow 6" ☐☐☐☐☐

1500 hydraulic system and hydraulic valves

1501 Pressure relief valve ☐☐☐☐☐

1502 pressure settings ☐☐☐☐☐

1503 hydraulic lines ☐☐☐☐☐

1504 hand oprerating-(function) ☐☐☐☐☐

1505 boom control valve ☐☐☐☐☐

1506 hydraulic pump ☐☐☐☐☐

1600 electric equipment

1601 remote control (functions) ☐☐☐☐☐

1602 emergency stop (function) ☐☐☐☐☐

1603 switch for outrigger function ☐☐☐☐☐

1604 switch for boom function ☐☐☐☐☐

1605 wiring harness ☐☐☐☐☐

1606 central lubrication ☐☐☐☐☐

1700 sticker sets

1701 safety hints ☐☐☐☐☐

1702 description ☐☐☐☐☐

1703 operating ☐☐☐☐☐

1704 short operating instruction ☐☐☐☐☐

1705 sticker „ don´t use the boom as crane" ☐☐☐☐☐

1706 sticker „guideline operating with boom- and concrete pump" ☐☐☐☐☐

1707 name plate ☐☐☐☐☐

1708 sticker „danger high voltage" ☐☐☐☐☐

Competent inspector:

Date: _____

Name: _____

Signature: _____
(stamp)

Customer:

Signature: _____
(stamp)

Inspection report for concrete pump

Inspection report Nr:	Machine-Nr:	Hours of operation:
		Concrete output m³:
Company:	Post code:	City:

NL WV

Proof – Result of the tests

without defects	defects	reinspection required	**shut down**
☐	☐	☐	☐

Reinspection until date:.....

Error code:

00 no objections	08 corrosion	16 porous	24 deformation
01 cracks	09 lacquer failures	17 burned through	25 bear movement
02 broken	10 fraying	18 not fixed	26 lubrication
03 leaky	11 scratched	19 clemp	27 readability
04 no fuction	12 bendet	20 sawing	28 missing components
05 low livetime	13 noises	21 contaminated	29 hydraulical
06 worn out	14 vibration	22 bad contact	30 electrical
07 dirt	15 miscellaneous	23 temperature	31 reinspection required

2000 documents		**2700 hydraulic control system**	
2001 operating manual	☐☐☐☐☐	2701 pressure relief valve	☐☐☐☐☐
2002 spare parts list	☐☐☐☐☐	2702 pressure setting	☐☐☐☐☐
2100 drive assembly		2703 hydraulic line	☐☐☐☐☐
2101 coupling and flange	☐☐☐☐☐	2704 mechanical operation by hand	☐☐☐☐☐
2200 gear box	☐☐☐☐☐		
2300 hydraulic pump (main)	☐☐☐☐☐	**2800 oil –cooler**	☐☐☐☐☐
		2900 accumulator	☐☐☐☐☐
2400 oil-tank	☐☐☐☐☐	2901 proofs of the required tests according to accumulator regulation	☐☐☐☐☐
2500 drive shaft	☐☐☐☐☐	2902 pressure gauge	☐☐☐☐☐

Notes:

Inspection report for concrete pump

Inspection report Nr:	Machine-Nr:

Error code:

00 no objections	08 corrosion	16 porous	24 deformation
01 cracks	09 lacquer failures	17 burned through	25 bear movement
02 broken	10 fraying	18 not fixed	26 lubrication
03 leaky	11 scratched	19 clemp	27 readability
04 no function	12 bendet	20 sawing	28 missing components
05 low lifetime	13 noises	21 contamitated	29 hydraulical
06 worn out	14 vibration	22 bad contact	30 electrical
07 dirt	15 miscellaneous	23 temperature	31 reinspection required

3000 central lubrication	☐	☐	☐	☐	☐	
3100 hydraulic motor	☐	☐	☐	☐	☐	
3200 hydraulic lines	☐	☐	☐	☐	☐	
3300 air compressor	☐	☐	☐	☐	☐	
3400 control panel	☐	☐	☐	☐	☐	
3500 concrete pump	☐	☐	☐	☐	☐	
3700 S-valve	☐	☐	☐	☐	☐	
3800 hopper	☐	☐	☐	☐	☐	
4100 sub frame	☐	☐	☐	☐	☐	
4200 water tank	☐	☐	☐	☐	☐	
4300 axle	☐	☐	☐	☐	☐	
4400 water pump	☐	☐	☐	☐	☐	
4500 vibrator	☐	☐	☐	☐	☐	

4600 safety guards, equipment						
4601 stair	☐	☐	☐	☐	☐	
4602 safety for stair	☐	☐	☐	☐	☐	
4603 handrail	☐	☐	☐	☐	☐	
4604 hopper grid (fixing device)	☐	☐	☐	☐	☐	
4606 distance of grid rods	☐	☐	☐	☐	☐	
4607 distance from grid to agitator	☐	☐	☐	☐	☐	
4609 agitator have to stop if grid is open	☐	☐	☐	☐	☐	
4610 accumulator have to dump if grid is open	☐	☐	☐	☐	☐	
4612 cleaning flap hopper	☐	☐	☐	☐	☐	
4613 safety grid into water box	☐	☐	☐	☐	☐	

Notes:

Inspection report for concrete pump

Inspection report Nr:

Machine-Nr:

Error code:

00 no objections	08 corrosion	16 porous	24 deformation
01 cracks	09 lacquer failures	17 burned through	25 bear movement
02 broken	10 fraying	18 not fixed	26 lubrication
03 leaky	11 scratched	19 clemp	27 readability
04 no function	12 bendet	20 sawing	28 missing components
05 low lifetime	13 noises	21 contamitated	29 hydraulical
06 worn out	14 vibration	22 bad contact	30 electrical
07 dirt	15 miscellaneous	23 temperature	31 reinspection required

4614 cover for rotating wave	☐	☐	☐	☐	☐
4616 cover for chains	☐	☐	☐	☐	☐
4617 cover for shift cylinder	☐	☐	☐	☐	☐
4618 cover for moving parts	☐	☐	☐	☐	☐
4619 cover for the exhaust pipe	☐	☐	☐	☐	☐
4700 electrical system					
4701 function of actuator component	☐	☐	☐	☐	☐
4702 emergency stop function	☐	☐	☐	☐	☐
4703 ground connections	☐	☐	☐	☐	☐
4704 cables and wiring harness	☐	☐	☐	☐	☐
4705 temperature switch	☐	☐	☐	☐	☐
4800 outtrigger - system					
4801 transportation lock	☐	☐	☐	☐	☐
4802 locking device	☐	☐	☐	☐	☐
4803 backing plate	☐	☐	☐	☐	☐
4804 jack cylinder connections	☐	☐	☐	☐	☐
4805 pressure adjustment of jack cylinder	☐	☐	☐	☐	☐
4900 miscellaneous					
4901 additional assembled part from operator	☐	☐	☐	☐	☐
4902 changes through operator	☐	☐	☐	☐	☐

Competent inspector:

Date: .....

Name: .....

Signature: .....
(stamp)

Customer:

Signature: .....
(stamp)

This test report is filed into the test book

Inspection report for concrete booms

Inspection report –Nr:	Machine-Nr	Hours of operation:	
		Concrete output m³:	
Company:	Post code:	City:	
Boom Type:	Boom Nr.	NL	WV

Proof – Result of the Tests

without defects	defects	reinspection required	**shut down**
☐	☐	☐	☐

Reinspection until date:.....

Error code:

00 no objections	08 corrosion	16 porous	24 deformation
01 cracks	09 lacquer failures	17 burned through	25 bear movement
02 broken	10 fraying	18 not fixed	26 lubrication
03 leaky	11 scratched	19 clemp	27 readability
04 no function	12 bendet	20 sawing	28 missing components
05 low lifetime	13 noises	21 contaminated	29 hydraulical
06 worn out	14 vibration	22 bad contact	30 electrical
07 dirt	15 miscellaneous	23 temperature	31 reinspection required

100 documents
101 instruction manual ☐☐☐☐☐
102 spare parts list ☐☐☐☐☐

200 sub frame
201 frame connection cpl. ☐☐☐☐☐

300 outrigger front R+L
301 transportation safety device ☐☐☐☐☐
302 outrigger ☐☐☐☐☐
303 extension box ☐☐☐☐☐
304 locking device ☐☐☐☐☐
305 slewing bearing ☐☐☐☐☐
306 turn locking device ☐☐☐☐☐
307 support safeguard ☐☐☐☐☐
308 support plate ☐☐☐☐☐
309 fixing of jack cylinder ☐☐☐☐☐
310 jack cylinder ☐☐☐☐☐
311 swing cylinder ☐☐☐☐☐
312 telescopic-cylinder ☐☐☐☐☐
313 pressure adjustment ☐☐☐☐☐

400 outrigger rear L+R
401 transportation safety device ☐☐☐☐☐
402 outrigger ☐☐☐☐☐
403 extension box ☐☐☐☐☐
405 locking device ☐☐☐☐☐

Notes:

Inspection report for concrete booms

Inspection report Nr:	Boom type:	Machine-Nr:

Error code:

00 no objections	08 corrosion	16 porous	24 deformation
01 cracks	09 lacquer failures	17 burned through	25 bear movement
02 broken	10 fraying	18 not fixed	26 lubrication
03 leaky	11 scratched	19 clemp	27 readability
04 no function	12 bendet	20 sawing	28 missing components
05 low lifetime	13 noises	21 contaminated	29 hydraulical
06 worn out	14 vibration	22 bad contact	30 electrical
07 dirt	15 miscellaneous	23 temperature	31 reinspection required

406 slewing bearing ☐☐☐☐☐

407 turn locking device ☐☐☐☐☐

408 support safeguard ☐☐☐☐☐

409 support plate ☐☐☐☐☐

410 fixing of jack cylinder ☐☐☐☐☐

411 jack cylinder ☐☐☐☐☐

412 swing cylinder ☐☐☐☐☐

413 telescopic cylinder ☐☐☐☐☐

500 pedestal

501 pedestal mounting ☐☐☐☐☐

502 sub frame ☐☐☐☐☐

503 truck frame ☐☐☐☐☐

504 pedestal (structure) ☐☐☐☐☐

505 boom valve without leaking ☐☐☐☐☐

506 boom rest ☐☐☐☐☐

507 transportation safety device ☐☐☐☐☐

508 hydraulic line ☐☐☐☐☐

600 slewing head with ball pivot

601 slewing head ☐☐☐☐☐

602 ball pivot ring ☐☐☐☐☐

603 mounting ball pivot ring ☐☐☐☐☐

604 drive pinion ☐☐☐☐☐

605 slewing drive mounting ☐☐☐☐☐

606 slewing stop device ☐☐☐☐☐

607 slewing drive (tooth backlash) ☐☐☐☐☐

608 slewing drive ☐☐☐☐☐

609 brake function ☐☐☐☐☐

610 speed ☐☐☐☐☐

611 pressure setting ☐☐☐☐☐

612 hydraulic lines ☐☐☐☐☐

700 slewing head with slewing column

701 slewing head ☐☐☐☐☐

702 slewing column bearing ☐☐☐☐☐

703 slewing drive (tooth backlash) ☐☐☐☐☐

704 speed ☐☐☐☐☐

705 pressure settings ☐☐☐☐☐

706 hydraulic lines ☐☐☐☐☐

707 swivel cylinder ☐☐☐☐☐

Notes:

Inspection report for concrete booms

Inspection report Nr:	Boom type:	Machine-Nr:

Error code:

00 no objections	08 corrosion	16 porous	24 deformation
01 cracks	09 lacquer failures	17 burned through	25 bear movement
02 broken	10 fraying	18 not fixed	26 lubrication
03 leaky	11 scratched	19 clemp	27 readability
04 no function	12 bendet	20 sawing	28 missing components
05 low lifetime	13 noises	21 contamitated	29 hydraulical
06 worn out	14 vibration	22 bad contact	30 electrical
07 dirt	15 miscellaneous	23 temperature	31 reinspection required

800 boom

801 „Arm1“

802 bracket conveying line

803 Drop hook

804 „Arm 2“

805 bracket conveying line

806 Drop hook

807 „Arm 3“

808 bracket conveying line

809 guidance and interlock of the arm

810 „Arm 4“

811 bracket conveying line

812 guidance and interlock of the arm

813 „Arm 5“

814 bracket conveying line

815 guidance and interlock of the arm

900 joint „A“

901 boom

902 link lever

903 forcing rod

904 pin

905 cylinder

906 boom speed

907 pressure settings

908 hydraulic lines

909 load holding valve (piston side)

910 load holding valve (rod side)

1000 joint „B“

1001 boom

1002 link lever

1003 forcing rod

1004 pin

1005 cylinder

1006 boom speed

1007 pressure settings

1008 hydraulic lines

1009 load holding valve (piston side)

1010 load holding valve (rod side)

Notes:

Inspection report for concrete booms

Inspection report Nr:	Boom type:	Machine-Nr:

Error code:

00 no objections	08 corrosion	16 porous	24 deformation
01 cracks	09 lacquer failures	17 burned through	25 bear movement
02 broken	10 fraying	18 not fixed	26 lubrication
03 leaky	11 scratched	19 clemp	27 readability
04 no function	12 bendet	20 sawing	28 missing components
05 low lifetime	13 noises	21 contaminated	29 hydraulical
06 worn out	14 vibration	22 bad contact	30 electrical
07 dirt	15 miscellaneous	23 temperature	31 reinspection required

1100 joint "C"

1101 boom	☐	☐	☐	☐	☐
1102 link lever	☐	☐	☐	☐	☐
1103 forcing rod	☐	☐	☐	☐	☐
1104 pin	☐	☐	☐	☐	☐
1105 cylinder	☐	☐	☐	☐	☐
1106 boom speed	☐	☐	☐	☐	☐
1107 pressure settings	☐	☐	☐	☐	☐
1108 hydraulic lines	☐	☐	☐	☐	☐
1109 load holding valve (piston side)	☐	☐	☐	☐	☐
1110 load hokding valve (rod side)	☐	☐	☐	☐	☐

1200 joint "D"

1201 boom	☐	☐	☐	☐	☐
1202 link lever	☐	☐	☐	☐	☐
1203 forcing rod	☐	☐	☐	☐	☐
1204 pin	☐	☐	☐	☐	☐
1205 cylinder	☐	☐	☐	☐	☐
1206 boom speed	☐	☐	☐	☐	☐
1207 pressure settings	☐	☐	☐	☐	☐
1208 hydraulic lines	☐	☐	☐	☐	☐
1209 load holding valve (piston side)	☐	☐	☐	☐	☐
1210 load holding valve (rod side)	☐	☐	☐	☐	☐

1300 joint „E"

1301 boom	☐	☐	☐	☐	☐
1302 link lever	☐	☐	☐	☐	☐
1303 forcing rod	☐	☐	☐	☐	☐
1304 pin	☐	☐	☐	☐	☐
1305 cylinder	☐	☐	☐	☐	☐
1306 boom speed	☐	☐	☐	☐	☐
1307 pressure settings	☐	☐	☐	☐	☐
1308 hydraulic lines	☐	☐	☐	☐	☐
1309 load holding valve (piston side)	☐	☐	☐	☐	☐
1310 load holding valve (rod side)	☐	☐	☐	☐	☐

1400 concrete delivery line

1401 assembly of delivery line DN	☐	☐	☐	☐	☐
1402 end hose DN+lenght	☐	☐	☐	☐	☐
1403 delivery line DN	☐	☐	☐	☐	☐
1404 rotating joints of - delivery line	☐	☐	☐	☐	☐
1405 locking pin of the coupling	☐	☐	☐	☐	☐

Notes:

Inspection report for concrete booms

Inspection report Nr:	Boom type:	Machine-Nr:

Error code:

00 no objections	08 corrosion	16 porous	24 deformation
01 cracks	09 lacquer failures	17 burned through	25 bear movement
02 broken	10 fraying	18 not fixed	26 lubrication
03 leaky	11 scratched	19 clemp	27 readability
04 no function	12 bendet	20 sawing	28 missing components
05 low lifetime	13 noises	21 contamitated	29 hydraulical
06 worn out	14 vibration	22 bad contact	30 electrical
07 dirt	15 miscellaneous	23 temperature	31 reinspection required

1406 end hose safety device ☐☐☐☐☐

1407 reducer ☐☐☐☐☐

1408 gate elbow, elbow 6" ☐☐☐☐☐

1500 hydraulic system and hydraulic valves

1501 Pressure relief valve ☐☐☐☐☐

1502 pressure settings ☐☐☐☐☐

1503 hydraulic lines ☐☐☐☐☐

1504 hand oprerating-(function) ☐☐☐☐☐

1505 boom control valve ☐☐☐☐☐

1506 hydraulic pump ☐☐☐☐☐

1600 electric equipment

1601 remote control (functions) ☐☐☐☐☐

1602 emergency stop (function) ☐☐☐☐☐

1603 switch for outrigger function ☐☐☐☐☐

1604 switch for boom function ☐☐☐☐☐

1605 wiring harness ☐☐☐☐☐

1606 central lubrication ☐☐☐☐☐

1700 sticker sets

1701 safety hints ☐☐☐☐☐

1702 description ☐☐☐☐☐

1703 operating ☐☐☐☐☐

1704 short operating instruction ☐☐☐☐☐

1705 sticker „ don´t use the boom as crane" ☐☐☐☐☐

1706 sticker „guideline operating with boom- and concrete pump" ☐☐☐☐☐

1707 name plate ☐☐☐☐☐

1708 sticker „danger high voltage" ☐☐☐☐☐

Competent inspector:

Date: _____

Name: _____

Signature: _____
(stamp)

Customer:

Signature: _____
(stamp)

Inspection report for concrete pump

Inspection report Nr:	Machine-Nr:	Hours of operation:
		Concrete output m³:
Company:	Post code:	City:

NL | WV

Proof – Result of the tests

without defects	defects	reinspection required	**shut down**
☐	☐	☐	☐

Reinspection until date:.....

Error code:

00 no objections	08 corrosion	16 porous	24 deformation
01 cracks	09 lacquer failures	17 burned through	25 bear movement
02 broken	10 fraying	18 not fixed	26 lubrication
03 leaky	11 scratched	19 clemp	27 readability
04 no fuction	12 bendet	20 sawing	28 missing components
05 low livetime	13 noises	21 contaminated	29 hydraulical
06 worn out	14 vibration	22 bad contact	30 electrical
07 dirt	15 miscellaneous	23 temperature	31 reinspection required

2000 documents					**2700 hydraulic control system**					
2001 operating manual	☐	☐	☐	☐	☐	2701 pressure relief valve	☐	☐	☐	☐	☐
2002 spare parts list	☐	☐	☐	☐	☐	2702 pressure setting	☐	☐	☐	☐	☐
2100 drive assembly						2703 hydraulic line	☐	☐	☐	☐	☐
2101 coupling and flange	☐	☐	☐	☐	☐	2704 mechanical operation by hand	☐	☐	☐	☐	☐
2200 gear box	☐	☐	☐	☐	☐	**2800 oil –cooler**	☐	☐	☐	☐	☐
2300 hydraulic pump (main)	☐	☐	☐	☐	☐	**2900 accumulator**	☐	☐	☐	☐	☐
2400 oil-tank	☐	☐	☐	☐	☐	2901 proofs of the required tests according to accumulator regulation	☐	☐	☐	☐	☐
2500 drive shaft	☐	☐	☐	☐	☐	2902 pressure gauge	☐	☐	☐	☐	☐

Notes:

Inspection report for concrete pump

Inspection report Nr:

Machine-Nr:

Error code:

00 no objections	08 corrosion	16 porous	24 deformation
01 cracks	09 lacquer failures	17 burned through	25 bear movement
02 broken	10 fraying	18 not fixed	26 lubrication
03 leaky	11 scratched	19 clemp	27 readability
04 no function	12 bendet	20 sawing	28 missing components
05 low lifetime	13 noises	21 contamitated	29 hydraulical
06 worn out	14 vibration	22 bad contact	30 electrical
07 dirt	15 miscellaneous	23 temperature	31 reinspection required

3000 central lubrication ☐☐☐☐☐	**4600 safety guards, equipment**
3100 hydraulic motor ☐☐☐☐☐	4601 stair ☐☐☐☐☐
3200 hydraulic lines ☐☐☐☐☐	4602 safety for stair ☐☐☐☐☐
3300 air compressor ☐☐☐☐☐	4603 handrail ☐☐☐☐☐
3400 control panel ☐☐☐☐☐	4604 hopper grid (fixing device) ☐☐☐☐☐
3500 concrete pump ☐☐☐☐☐	4606 distance of grid rods ☐☐☐☐☐
3700 S-valve ☐☐☐☐☐	4607 distance from grid to agitator ☐☐☐☐☐
3800 hopper ☐☐☐☐☐	4609 agitator have to stop if grid is open ☐☐☐☐☐
4100 sub frame ☐☐☐☐☐	4610 accumulator have to dump if grid is open ☐☐☐☐☐
4200 water tank ☐☐☐☐☐	4612 cleaning flap hopper ☐☐☐☐☐
4300 axle ☐☐☐☐☐	4613 safety grid into water box ☐☐☐☐☐
4400 water pump ☐☐☐☐☐	
4500 vibrator ☐☐☐☐☐	

Notes:

Inspection report for concrete pump

Inspection report Nr:

Machine-Nr:

Error code:

00 no objections	08 corrosion	16 porous	24 deformation
01 cracks	09 lacquer failures	17 burned through	25 bear movement
02 broken	10 fraying	18 not fixed	26 lubrication
03 leaky	11 scratched	19 clemp	27 readability
04 no function	12 bendet	20 sawing	28 missing components
05 low lifetime	13 noises	21 contamitated	29 hydraulical
06 worn out	14 vibration	22 bad contact	30 electrical
07 dirt	15 miscellaneous	23 temperature	31 reinspection required

4614 cover for rotating wave ☐☐☐☐☐

4616 cover for chains ☐☐☐☐☐

4617 cover for shift cylinder ☐☐☐☐☐

4618 cover for moving parts ☐☐☐☐☐

4619 cover for the exhaust pipe ☐☐☐☐☐

4700 electrical system

4701 function of actuator component ☐☐☐☐☐

4702 emergency stop function ☐☐☐☐☐

4703 ground connections ☐☐☐☐☐

4704 cables and wiring harness ☐☐☐☐☐

4705 temperature switch ☐☐☐☐☐

4800 outtrigger - system

4801 transportation lock ☐☐☐☐☐

4802 locking device ☐☐☐☐☐

4803 backing plate ☐☐☐☐☐

4804 jack cylinder connections ☐☐☐☐☐

4805 pressure adjustment of jack cylinder ☐☐☐☐☐

4900 miscellaneous

4901 additional assembled part from operator ☐☐☐☐☐

4902 changes through operator ☐☐☐☐☐

Competent inspector:

Date: .....

Name: .....

Signature: .....
(stamp)

Customer:

Signature: .....
(stamp)

This test report is filed into the test book

Inspection report for concrete booms

Inspection report –Nr:	Machine-Nr	Hours of operation:	
		Concrete output m³:	
Company:	Post code:	City:	
Boom Type:	Boom Nr.	NL	WV

Proof – Result of the Tests

without defects	defects	reinspection required	**shut down**
☐	☐	☐	☐

Reinspection until date:.....

Error code:

00 no objections	08 corrosion	16 porous	24 deformation
01 cracks	09 lacquer failures	17 burned through	25 bear movement
02 broken	10 fraying	18 not fixed	26 lubrication
03 leaky	11 scratched	19 clemp	27 readability
04 no function	12 bendet	20 sawing	28 missing components
05 low lifetime	13 noises	21 contaminated	29 hydraulical
06 worn out	14 vibration	22 bad contact	30 electrical
07 dirt	15 miscellaneous	23 temperature	31 reinspection required

100 documents

101 instruction manual ☐☐☐☐☐

102 spare parts list ☐☐☐☐☐

200 sub frame

201 frame connection cpl. ☐☐☐☐☐

300 outrigger front R+L

301 transportation safety device ☐☐☐☐☐

302 outrigger ☐☐☐☐☐

303 extension box ☐☐☐☐☐

304 locking device ☐☐☐☐☐

305 slewing bearing ☐☐☐☐☐

306 turn locking device ☐☐☐☐☐

307 support safeguard ☐☐☐☐☐

308 support plate ☐☐☐☐☐

309 fixing of jack cylinder ☐☐☐☐☐

310 jack cylinder ☐☐☐☐☐

311 swing cylinder ☐☐☐☐☐

312 telescopic-cylinder ☐☐☐☐☐

313 pressure adjustment ☐☐☐☐☐

400 outrigger rear L+R

401 transportation safety device ☐☐☐☐☐

402 outrigger ☐☐☐☐☐

403 extension box ☐☐☐☐☐

405 locking device ☐☐☐☐☐

Notes:

Inspection report for concrete booms

Inspection report Nr:	Boom type:	Machine-Nr:

Error code:

00 no objections	08 corrosion	16 porous	24 deformation
01 cracks	09 lacquer failures	17 burned through	25 bear movement
02 broken	10 fraying	18 not fixed	26 lubrication
03 leaky	11 scratched	19 clemp	27 readability
04 no function	12 bendet	20 sawing	28 missing components
05 low lifetime	13 noises	21 contaminated	29 hydraulical
06 worn out	14 vibration	22 bad contact	30 electrical
07 dirt	15 miscellaneous	23 temperature	31 reinspection required

406 slewing bearing ☐☐☐☐☐

407 turn locking device ☐☐☐☐☐

408 support safeguard ☐☐☐☐☐

409 support plate ☐☐☐☐☐

410 fixing of jack cylinder ☐☐☐☐☐

411 jack cylinder ☐☐☐☐☐

412 swing cylinder ☐☐☐☐☐

413 telescopic cylinder ☐☐☐☐☐

500 pedestal

501 pedestal mounting ☐☐☐☐☐

502 sub frame ☐☐☐☐☐

503 truck frame ☐☐☐☐☐

504 pedestal (structure) ☐☐☐☐☐

505 boom valve without leaking ☐☐☐☐☐

506 boom rest ☐☐☐☐☐

507 transportation safety device ☐☐☐☐☐

508 hydraulic line ☐☐☐☐☐

600 slewing head with ball pivot

601 slewing head ☐☐☐☐☐

602 ball pivot ring ☐☐☐☐☐

603 mounting ball pivot ring ☐☐☐☐☐

604 drive pinion ☐☐☐☐☐

605 slewing drive mounting ☐☐☐☐☐

606 slewing stop device ☐☐☐☐☐

607 slewing drive (tooth backlash) ☐☐☐☐☐

608 slewing drive ☐☐☐☐☐

609 brake function ☐☐☐☐☐

610 speed ☐☐☐☐☐

611 pressure setting ☐☐☐☐☐

612 hydraulic lines ☐☐☐☐☐

700 slewing head with slewing column

701 slewing head ☐☐☐☐☐

702 slewing column bearing ☐☐☐☐☐

703 slewing drive (tooth backlash) ☐☐☐☐☐

704 speed ☐☐☐☐☐

705 pressure settings ☐☐☐☐☐

706 hydraulic lines ☐☐☐☐☐

707 swivel cylinder ☐☐☐☐☐

Notes:

Inspection report for concrete booms

Inspection report Nr:	Boom type:	Machine-Nr:

Error code:

00 no objections	08 corrosion	16 porous	24 deformation
01 cracks	09 lacquer failures	17 burned through	25 bear movement
02 broken	10 fraying	18 not fixed	26 lubrication
03 leaky	11 scratched	19 clemp	27 readability
04 no function	12 bendet	20 sawing	28 missing components
05 low lifetime	13 noises	21 contamitated	29 hydraulical
06 worn out	14 vibration	22 bad contact	30 electrical
07 dirt	15 miscellaneous	23 temperature	31 reinspection required

800 boom
801 „Arm1“
802 bracket conveying line
803 Drop hook
804 „Arm 2“
805 bracket conveying line
806 Drop hook
807 „Arm 3“
808 bracket conveying line
809 guidance and interlock of the arm
810 „Arm 4“
811 bracket conveying line
812 guidance and interlock of the arm
813 „Arm 5“
814 bracket conveying line
815 guidance and interlock of the arm

900 joint „A“
901 boom
902 link lever
903 forcing rod
904 pin
905 cylinder
906 boom speed
907 pressure settings
908 hydraulic lines
909 load holding valve (piston side)
910 load holding valve (rod side)

1000 joint „B“
1001 boom
1002 link lever
1003 forcing rod
1004 pin
1005 cylinder
1006 boom speed
1007 pressure settings
1008 hydraulic lines
1009 load holding valve (piston side)
1010 load holding valve (rod side)

Notes:

Inspection report for concrete booms

Inspection report Nr:	Boom type:	Machine-Nr:

Error code:

00 no objections	08 corrosion	16 porous	24 deformation
01 cracks	09 lacquer failures	17 burned through	25 bear movement
02 broken	10 fraying	18 not fixed	26 lubrication
03 leaky	11 scratched	19 clemp	27 readability
04 no function	12 bendet	20 sawing	28 missing components
05 low lifetime	13 noises	21 contaminated	29 hydraulical
06 worn out	14 vibration	22 bad contact	30 electrical
07 dirt	15 miscellaneous	23 temperature	31 reinspection required

1100 joint "C"

1101 boom	☐	☐	☐	☐	☐
1102 link lever	☐	☐	☐	☐	☐
1103 forcing rod	☐	☐	☐	☐	☐
1104 pin	☐	☐	☐	☐	☐
1105 cylinder	☐	☐	☐	☐	☐
1106 boom speed	☐	☐	☐	☐	☐
1107 pressure settings	☐	☐	☐	☐	☐
1108 hydraulic lines	☐	☐	☐	☐	☐
1109 load holding valve (piston side)	☐	☐	☐	☐	☐
1110 load hokding valve (rod side)	☐	☐	☐	☐	☐

1200 joint "D"

1201 boom	☐	☐	☐	☐	☐
1202 link lever	☐	☐	☐	☐	☐
1203 forcing rod	☐	☐	☐	☐	☐
1204 pin	☐	☐	☐	☐	☐
1205 cylinder	☐	☐	☐	☐	☐
1206 boom speed	☐	☐	☐	☐	☐
1207 pressure settings	☐	☐	☐	☐	☐
1208 hydraulic lines	☐	☐	☐	☐	☐
1209 load holding valve (piston side)	☐	☐	☐	☐	☐
1210 load holding valve (rod side)	☐	☐	☐	☐	☐

1300 joint „E"

1301 boom	☐	☐	☐	☐	☐
1302 link lever	☐	☐	☐	☐	☐
1303 forcing rod	☐	☐	☐	☐	☐
1304 pin	☐	☐	☐	☐	☐
1305 cylinder	☐	☐	☐	☐	☐
1306 boom speed	☐	☐	☐	☐	☐
1307 pressure settings	☐	☐	☐	☐	☐
1308 hydraulic lines	☐	☐	☐	☐	☐
1309 load holding valve (piston side)	☐	☐	☐	☐	☐
1310 load holding valve (rod side)	☐	☐	☐	☐	☐

1400 concrete delivery line

1401 assembly of delivery line DN	☐	☐	☐	☐	☐
1402 end hose DN+lenght	☐	☐	☐	☐	☐
1403 delivery line DN	☐	☐	☐	☐	☐
1404 rotating joints of - delivery line	☐	☐	☐	☐	☐
1405 locking pin of the coupling	☐	☐	☐	☐	☐

Notes:

Inspection report for concrete booms

Inspection report Nr:	Boom type:	Machine-Nr:

Error code:

00 no objections	08 corrosion	16 porous	24 deformation
01 cracks	09 lacquer failures	17 burned through	25 bear movement
02 broken	10 fraying	18 not fixed	26 lubrication
03 leaky	11 scratched	19 clemp	27 readability
04 no function	12 bendet	20 sawing	28 missing components
05 low lifetime	13 noises	21 contamitated	29 hydraulical
06 worn out	14 vibration	22 bad contact	30 electrical
07 dirt	15 miscellaneous	23 temperature	31 reinspection required

1406 end hose safety device	☐	☐	☐	☐	☐
1407 reducer	☐	☐	☐	☐	☐
1408 gate elbow, elbow 6"	☐	☐	☐	☐	☐
1500 hydraulic system and hydraulic valves					
1501 Pressure relief valve	☐	☐	☐	☐	☐
1502 pressure settings	☐	☐	☐	☐	☐
1503 hydraulic lines	☐	☐	☐	☐	☐
1504 hand oprerating-(function)	☐	☐	☐	☐	☐
1505 boom control valve	☐	☐	☐	☐	☐
1506 hydraulic pump	☐	☐	☐	☐	☐
1600 electric equipment					
1601 remote control (functions)	☐	☐	☐	☐	☐
1602 emergency stop (function)	☐	☐	☐	☐	☐
1603 switch for outrigger function	☐	☐	☐	☐	☐
1604 switch for boom function	☐	☐	☐	☐	☐
1605 wiring harness	☐	☐	☐	☐	☐
1606 central lubrication	☐	☐	☐	☐	☐

1700 sticker sets					
1701 safety hints	☐	☐	☐	☐	☐
1702 description	☐	☐	☐	☐	☐
1703 operating	☐	☐	☐	☐	☐
1704 short operating instruction	☐	☐	☐	☐	☐
1705 sticker „ don´t use the boom as crane"	☐	☐	☐	☐	☐
1706 sticker „guideline operating with boom- and concrete pump"	☐	☐	☐	☐	☐
1707 name plate	☐	☐	☐	☐	☐
1708 sticker „danger high voltage"	☐	☐	☐	☐	☐

Competent inspector:

Date: _____

Name: _____

Signature: _____
(stamp)

Customer:

Signature: _____
(stamp)

Inspection report for concrete pump

Inspection report Nr:	Machine-Nr:	Hours of operation:
		Concrete output m³:
Company:	Post code:	City:

NL | WV

Proof – Result of the tests

without defects	defects	reinspection required	**shut down**
☐	☐	☐	☐

Reinspection until date:.....

Error code:

00 no objections	08 corrosion	16 porous	24 deformation
01 cracks	09 lacquer failures	17 burned through	25 bear movement
02 broken	10 fraying	18 not fixed	26 lubrication
03 leaky	11 scratched	19 clemp	27 readability
04 no fuction	12 bendet	20 sawing	28 missing components
05 low livetime	13 noises	21 contaminated	29 hydraulical
06 worn out	14 vibration	22 bad contact	30 electrical
07 dirt	15 miscellaneous	23 temperature	31 reinspection required

2000 documents					**2700 hydraulic control system**					
2001 operating manual	☐	☐	☐	☐	☐	2701 pressure relief valve	☐	☐	☐	☐	☐
2002 spare parts list	☐	☐	☐	☐	☐	2702 pressure setting	☐	☐	☐	☐	☐
2100 drive assembly						2703 hydraulic line	☐	☐	☐	☐	☐
2101 coupling and flange	☐	☐	☐	☐	☐	2704 mechanical operation by hand	☐	☐	☐	☐	☐
2200 gear box	☐	☐	☐	☐	☐	**2800 oil –cooler**	☐	☐	☐	☐	☐
2300 hydraulic pump (main)	☐	☐	☐	☐	☐	**2900 accumulator**	☐	☐	☐	☐	☐
2400 oil-tank	☐	☐	☐	☐	☐	2901 proofs of the required tests according to accumulator regulation	☐	☐	☐	☐	☐
2500 drive shaft	☐	☐	☐	☐	☐	2902 pressure gauge	☐	☐	☐	☐	☐

Notes:

Inspection report for concrete pump

Inspection report Nr:	Machine-Nr:

Error code:

00 no objections	08 corrosion	16 porous	24 deformation
01 cracks	09 lacquer failures	17 burned through	25 bear movement
02 broken	10 fraying	18 not fixed	26 lubrication
03 leaky	11 scratched	19 clemp	27 readability
04 no function	12 bendet	20 sawing	28 missing components
05 low lifetime	13 noises	21 contamitated	29 hydraulical
06 worn out	14 vibration	22 bad contact	30 electrical
07 dirt	15 miscellaneous	23 temperature	31 reinspection required

3000 central lubrication	☐☐☐☐☐	**4600 safety guards, equipment**	
3100 hydraulic motor	☐☐☐☐☐	4601 stair	☐☐☐☐☐
3200 hydraulic lines	☐☐☐☐☐	4602 safety for stair	☐☐☐☐☐
3300 air compressor	☐☐☐☐☐	4603 handrail	☐☐☐☐☐
3400 control panel	☐☐☐☐☐	4604 hopper grid (fixing device)	☐☐☐☐☐
3500 concrete pump	☐☐☐☐☐	4606 distance of grid rods	☐☐☐☐☐
3700 S-valve	☐☐☐☐☐	4607 distance from grid to agitator	☐☐☐☐☐
3800 hopper	☐☐☐☐☐	4609 agitator have to stop if grid is open	☐☐☐☐☐
4100 sub frame	☐☐☐☐☐	4610 accumulator have to dump if grid is open	☐☐☐☐☐
4200 water tank	☐☐☐☐☐	4612 cleaning flap hopper	☐☐☐☐☐
4300 axle	☐☐☐☐☐	4613 safety grid into water box	☐☐☐☐☐
4400 water pump	☐☐☐☐☐		
4500 vibrator	☐☐☐☐☐		

Notes:

Inspection report for concrete pump

Inspection report Nr:

Machine-Nr:

Error code:

00 no objections	08 corrosion	16 porous	24 deformation
01 cracks	09 lacquer failures	17 burned through	25 bear movement
02 broken	10 fraying	18 not fixed	26 lubrication
03 leaky	11 scratched	19 clemp	27 readability
04 no function	12 bendet	20 sawing	28 missing components
05 low lifetime	13 noises	21 contamitated	29 hydraulical
06 worn out	14 vibration	22 bad contact	30 electrical
07 dirt	15 miscellaneous	23 temperature	31 reinspection required

4614 cover for rotating wave ☐☐☐☐☐

4616 cover for chains ☐☐☐☐☐

4617 cover for shift cylinder ☐☐☐☐☐

4618 cover for moving parts ☐☐☐☐☐

4619 cover for the exhaust pipe ☐☐☐☐☐

4700 electrical system

4701 function of actuator component ☐☐☐☐☐

4702 emergency stop function ☐☐☐☐☐

4703 ground connections ☐☐☐☐☐

4704 cables and wiring harness ☐☐☐☐☐

4705 temperature switch ☐☐☐☐☐

4800 outtrigger - system

4801 transportation lock ☐☐☐☐☐

4802 locking device ☐☐☐☐☐

4803 backing plate ☐☐☐☐☐

4804 jack cylinder connections ☐☐☐☐☐

4805 pressure adjustment of jack cylinder ☐☐☐☐☐

4900 miscellaneous

4901 additional assembled part from operator ☐☐☐☐☐

4902 changes through operator ☐☐☐☐☐

Competent inspector:

Date: .....

Name: .....

Signature: .....
(stamp)

Customer:

Signature: .....
(stamp)

This test report is filed into the test book

AS WE MAKE IMPROVEMENTS TO THE ***REED*** TRUCK MOUNTED CONCRETE BOOM PUMP MODEL ***XXT42.5RZ***, WE LIKE TO SUPPLY YOU, THE CUSTOMER, WITH UPDATED INFORMATION WHICH APPLIES TO YOUR PUMP.

THIS SECTION IS PROVIDED AS A PLACE TO STORE SERVICE BULLETINS AS YOU RECEIVE THEM FROM ***REED*** **LLC.**

THIS PAGE INTENTIONALLY LEFT BLANK

SERVICE BULLETIN 001
WARRANTY PROGRAM

BULLETIN NO: SB 001

DATE: FEBRUARY 5,1998

TO: ALL ***REED*** DEALERS

SUBJECT: ***REED* WARRANTY PROGRAM**

Each ***REED*** Concrete Placing Trailer Pump, Truck Mounted Boom Pump and Dry-mix Spraying Gun, undergoes before delivery a thorough Quality Assurance inspection, a performance check and final testing. However, even with these precautions the possibility exists that after delivery, for some reason, a component may fail.

This is the reason for warranty. If this should happen to one of your machines during the first 12 months or 1000 pumping hours after delivery, there is a good chance the failed component could be replaced under warranty.

REED has updated and formalized its **WARRANTY PROGRAM** and this bulletin is issued to make all dealers aware of the program.

Enclosed is a supply of our new **WARRANTY CLAIM** forms. From this point on, all warranty claims must be submitted on these forms. Also, please find a description of the program, coverage and how to make a claim and its submission. We suggest you give this some careful attention. Briefly some noteworthy items are:

- Do not return any failed part unless requested by ***REED***.
- Purchase the replacement part through normal channels from ***REED***. Submit your claim noting the invoice number of the replacement part. Upon approval of the claim, a credit will be issued.
- Every effort will be made to process claim within 2 weeks from receipt except for those occasions where the part is to be returned.

Should questions arise during your review, please do not hesitate to contact us.

We appreciate the opportunity to be of service.

Sincerely,

Mike Wickstrom
Service Manage

WARRANTY PROGRAM POLICY

REED Concrete Placing Equipment MODEL ***XXT42.5RZ*** is designed and engineered to perform as stated on published specifications. Only quality materials and workmanship are used in the manufacture of these products. As a back up for the product manufactured by ***REED***, a guarantee against defects in design and workmanship of components is provided for each machine.

The ***REED*** guarantee/warranty states, in general, that ***REED*** will replace free of charge any components found to be defective within the time frame of the warranty period. There are exceptions to some components which are not the responsibility of ***REED***. These are noted elsewhere.

A formal printed policy is available and depicts in more detail the warranty and description. However, for your ready reference the following is offered:

A. WARRANTY PERIOD

- ALL CONCRETE PLACING MACHINES

  The warranty period is for twelve (12) months from date of delivery to initial user or 1000 pumping hours whichever comes first.

- NEW PARTS WARRANTY

  For parts sold through the ***REED*** Parts Department the warranty is ninety (90) days from invoice ship date.

- REPLACEMENT WARRANTY PARTS

  Replacement parts provided under the terms of the machine warranty are for the warranty period applicable to the unit in which they were installed as if such parts were original components of the machine.

B. WARRANTY COVERAGE

- DEFECTIVE PARTS

  Unless otherwise authorized the replacement part **MUST** be **PURCHASED** from ***REED***. Once warranty claim is received and approved, ***REED*** will provide credit to the dealer/user for their cost of the replacement part as invoiced by ***REED***.

- LABOR

  No labor time and related compensation will be provided by ***REED*** to dealers/users or others to perform work under this warranty policy.

- TRAVEL TIME

  No travel time, mileage or other expenses will be compensated by ***REED*** to dealers/users or others to perform work under this warranty policy.

- FREIGHT, IMPORT DOCUMENTATION, CUSTOM DUTY

  Any expense incurred for freight, import duty and documentation will not be reimbursed by ***REED*** in association with this warranty policy.

C. EXCLUSIONS

- CHASSIS AND RELATED COMPONENTS (TRUCK MOUNTED UNITS)

  The warranty for the chassis is handled by the chassis manufacturer and their dealer network. Prior to putting the truck in service it is suggested you contact the nearest manufacturer dealership.

- ENGINE - TRAILER UNITS

  The engine warranty is handled by the engine manufacturer and their dealer network. The terms and conditions of their warranty will apply. Contact the local engine dealer for specifics on warranty of the engine.

- NORMAL WEAR

  This pertains to items that have failed as a result of normal wear and tear to the product including but not limited to material cylinder and hydraulic cylinder piston components, delivery systems, pins, chains, bushings, seals, concrete pump wear parts, brakes, filter elements, fluids and tires.

- DAMAGES

  Caused by transport of equipment or parts, improper set-up or installation, operator error, improper operation or storage, environmental conditions, accidents, improper mechanical techniques employed by anyone or any other cause other than a structural defect in materials or workmanship.

- MAINTENANCE

  Caused by failure to perform any scheduled maintenance or routine maintenance as specified in technical manual on any structural or mechanical component.

- MODIFICATIONS

  Any non-authorized changes or modifications of any kind to the product. Any modification must be authorized and approved in writing by ***REED*** Engineering Department.

- ABUSE

  Any accidental or intentional abuse of product including but not limited to neglect, loading beyond capacity or any operation of the equipment beyond the limits set forth by ***REED*** documentation and as depicted in the appropriate technical manual.

D. SUBMISSION OF CLAIM BY DEALER/USER

Should a component failure be encountered during the warranty period and should it fall within the guidelines of the ***REED*** **WARRANTY POLICY** the following procedure is to be followed to claim warranty:

1. REPLACEMENT PART

   - Obtain the replacement part by ordering it from the **REED PARTS DEPT.** through normal channels. You will be **INVOICED** for the part.

   - If the part has been previously ordered from ***REED*** and is in your replacement stock inventory you may choose to use that part.

2. COMPLETE THE CLAIM FORM

   REED has supplied you with a pre-numbered Warranty Claim Form which consists of four (4) parts. This and only this form is **ACCEPTABLE**. **DUPLICATE** copies of the form are **NOT ACCEPTABLE**. If you do not have the proper form, contact the ***REED*** Service Department. They will send you a supply.

REED
CONCRETE PLACING EQUIPMENT

WARRANTY CLAIM

13822 OAKS AVENUE
CHINO, CA. 91710 909-364-2100

NO.

Date: (1)

Distributor Account Number:
Distributor: (2)
Address:
City:
State: Zip Code:
Phone: ( )

End User Account Number:
End User: (3)
Address:
City:
State: Zip Code:
Phone: ( )

MACHINE PUMP DATA

Model (4) Serial No. (5) In Service Date (6)
Hours of Operation (7) Failure Date (8) Repair Date (9)

NOTE - Hold deficient part(s) until requested by **REED** or until claim is approved. All parts requested to be returned must have a return authroization number provided by **REED**, shipped freight prepaid.Parts must ship within 30 days from **REED** request.

RETURN AUTHORIZATION NO. (10) SHIP DATE (11)

PART NUMBER	DESCRIPTION (12)	QTY.	NET PRICE	TOTAL PRICE	**REED** REPLACEMENT PART INVOICE NO. (13)

Describe Failure and How it Occurred (14)

REED comments

Claim Approved for

$

REED Use - Claim Approved ☐ Denied ☐

Signed Date

Dealer Signature (15)

Date

The following instructions are offered for completing the **WARRANTY CLAIM FORM**. Refer to sample of form. Circled numbers on form correspond to items below. **FILL IN**:

1. Date your claim is written

2. Distributor name and address

3. End user name and address

4. Model number of unit affected

5. Serial number of unit affected

6. Date unit was first placed in service

7. Hours (from hour-meter) of operation at time of failure

8. Date when failure occurred

9. Date when unit was repaired

10. Return Authorization number as received from ***REED*** Service Department. This will only apply when failed component is requested to be returned by ***REED***.

11. Date when failed part is shipped back to ***REED***

12. List ***REED*** part number, description of part, quantity and price of part.

13. List ***REED*** invoice number sent you when replacement part was purchased

14. Briefly describe failure and how it occurred

15. Dealers signature and date

The claim form **MUST BE COMPLETELY FILLED OUT**. Claims lacking specific, accurate information will be returned **UNPROCESSED**. If additional room is needed to describe the failure or to list the parts used, attach a separate sheet and identify those sheets with the **SAME WARRANTY CLAIM NUMBER**.

3. SUBMITTING TO ***REED***

When all appropriate data has been entered on the claim and signed, proceed as follows:

- Remove copies of form marked **"DEALER"** (yellow) and **"RETURN AUTHORIZATION"** (green). The Dealer copy is for your records and the Return Authorization copy is to be retained in the event ***REED*** requests the return of the part.

- Mail the ***"REED"*** copy (white) and **"ACCOUNTING"** copy (pink) along with any back-up data such as a copy of the replacement part **INVOICE** to ***REED***. **DO NOT FAX COMPLETED FORM** and send only **FORM ORIGINALS**.

E. RETURN OF FAILED COMPONENT

Depending on the type of part and circumstance surrounding the component failure, the possibility exists that ***REED*** may request that the failed part be returned to them for investigation and evaluation purposes or to apply for warranty from the manufacturer of the part.

- Upon receipt of your warranty claim and before claim is approved, ***REED*** will inform you in writing if the part is to be returned. On this correspondence a **RETURN AUTHORIZATION** number will be given to you.

- This number is to be written in the appropriate area on the **RETURN AUTHORIZATION** copy (green) of the warranty form. Include this copy as part of your packing slip. Also write the number on a tag and attach to the part.

- Parts requested to be returned must be shipped back to ***REED*** within 30 days from issuing of the **RA** number. Failure to do so will cause warranty claim to be **DENIED**.

- Returned parts are to be properly packaged and shipped freight **PREPAID**.

- Any parts received by ***REED*** without the **PROPER RA** number will be shipped back at **DEALER/USER EXPENSE**.

- If claim is approved and no request to return parts from ***REED*** has been made, then parts can be discarded.

F. APPROVAL/DENIAL OF CLAIM

Every effort will be made to process the warranty claim within 2 weeks from receipt.

- APPROVAL

  Once your claim has been approved by ***REED***, the pink copy will be forwarded to our Accounting Dept. They in turn will issue a credit against the invoice for the replacement purchased part.

  In the meantime a fax or notification will be sent you indicating the claim and the amount approved.

- DENIAL

  If your warranty claim is denied for any reason, a fax or notification will be sent to you indicating reasons for denial. Should you have any dispute with the decision, you have the right to have the decision reconsidered. You must present your arguments in **WRITING** within 15 days of your receipt of the claim denial.

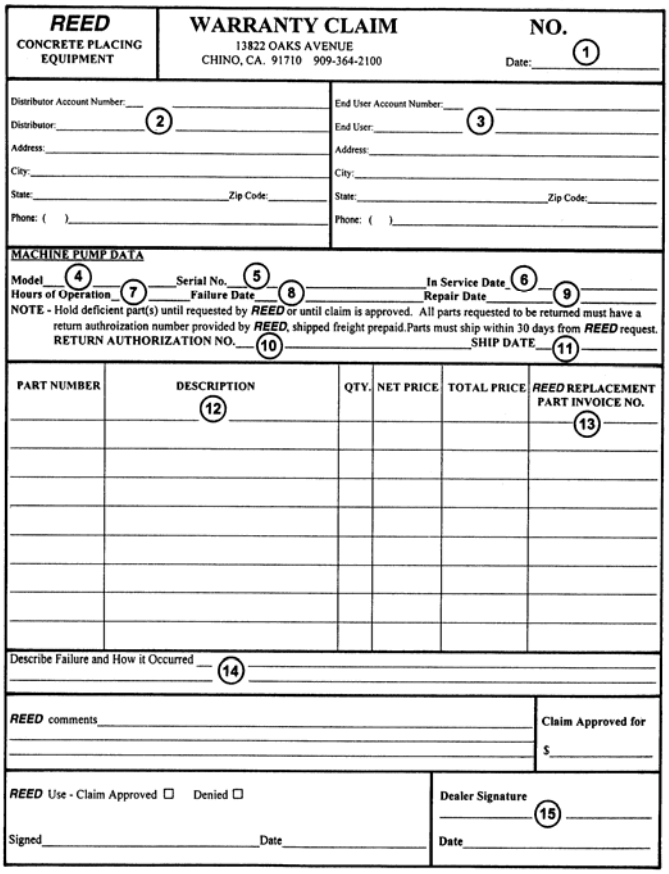

REED
CONCRETE PLACING EQUIPMENT

WARRANTY CLAIM NO. (1)
13822 OAKS AVENUE
CHINO, CA. 91710 909-364-2100
Date:

Distributor Account Number:
Distributor: (2)
Address:
City:
State: Zip Code:
Phone: ( )

End User Account Number:
End User: (3)
Address:
City:
State: Zip Code:
Phone: ( )

MACHINE PUMP DATA
Model (4) Serial No. (5) In Service Date (6)
Hours of Operation (7) Failure Date (8) Repair Date (9)
NOTE - Hold deficient part(s) until requested by **REED** or until claim is approved. All parts requested to be returned must have a return authroization number provided by **REED**, shipped freight prepaid.Parts must ship within 30 days from **REED** request.
RETURN AUTHORIZATION NO. (10) SHIP DATE (11)

PART NUMBER	DESCRIPTION (12)	QTY.	NET PRICE	TOTAL PRICE	*REED* REPLACEMENT PART INVOICE NO. (13)

Describe Failure and How it Occurred (14)

REED comments

Claim Approved for
$

REED Use - Claim Approved ☐ Denied ☐

Signed Date

Dealer Signature (15)
Date